GLEDHILL

STAINLESSLITE PLUS HORIZONTAL

UNVENTED MAINS PRESSURE
HOT WATER STORAGE

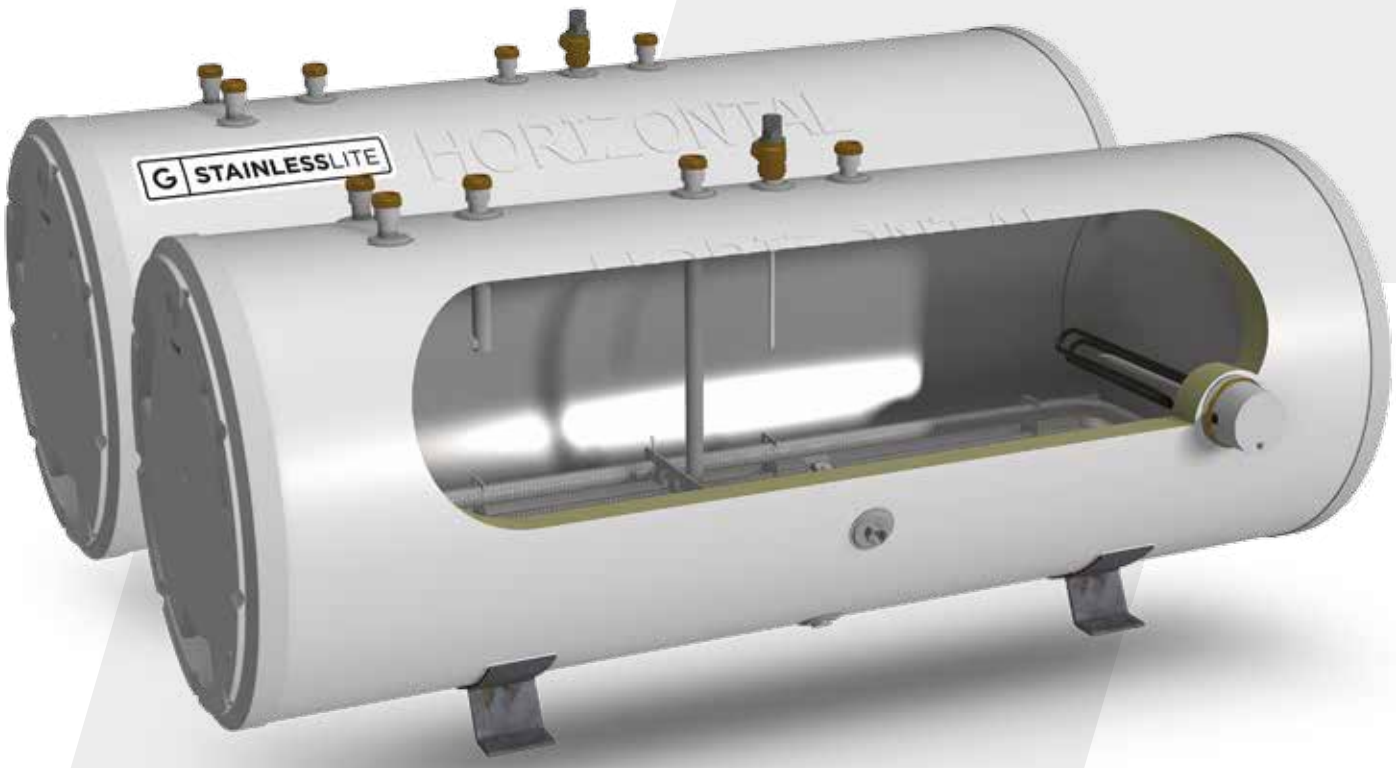

INSTRUCTION MANUAL
DESIGN, INSTALLATION & SERVICING

ONE NAME. EVERY SOLUTION.

WWW.GLEDHILL.NET

These instructions should be read in conjunction with the installation/servicing instructions issued by the manufacturer of the heat source being used.

Any installation must be in accordance with the relevant requirements of the Gas Safety Regulations, Building Regulations, I.E.E. Wiring Regulations and the Water Fitting Regulations (England and Wales) or Water Byelaws (Scotland). It should be read in accordance with the relevant recommendations of the following:
BS 6798; BS EN 12828, BS EN 12831, BS EN 14336; BS 5546;
BS 5440:1; BS 5440:2; CP 331:3
BS EN 806-1 to 5, BS EN 8558:2011: BS EN 1458-1:2011 and BS 7593:2006

StainlessLite Plus is covered by Section G3 of the Building Regulations (England and Wales) Technical Standard P3 (Scotland) and Building Regulation P5 (Northern Ireland). Compliance can be achieved via a Competent Person Self Certification Scheme or notificaton of installation to the Local Authority Building Control Department.

It must be installed by a competent person as defined by the relevant regulations. Manufacturers notes must NOT be taken as over-riding statutory obligations.

This appliance is not intended for use by persons (including children) with reduced physical, sensory or mental capabilities, or lack of experience and knowledge unless they have been given supervision or instruction concerning use of the appliance by a person responsible for their safety. Children should be supervised at all times to ensure they do not play with the appliance.

This information is provided to assist generally in the selection of equipment. Responsibility for selection and specification of our equipment must however remain that of our customer and any experts or consultants concerned with the installation(s).

Please note: that we do not therefore accept any responsibility for matters of design selection or specification, for the effectiveness of an installation or system containing one of our products unless specifically requested to do so in writing.

All goods are sold subject to our Conditions of Sale which are set out at the rear of this specification. In the interest of continuously improving the StainlessLite Plus range, Gledhill Building Products Limited reserve the right to modify the product without notice, and in these circumstances this booklet, which is accurate at the time of printing, should be disregarded. An updated set of Instructions will be produced and supplied with new appliances and will be made available for other appliances on request.

StainlessLite Plus is produced under an ISO 9001:2008 Quality Management System approved by BSI.

benchmark COLLECTIVE MARK
THE MARK OF QUALITY FOR THE INSTALLATION, COMMISSIONING AND SERVICING OF DOMESTIC HEATING AND HOT WATER SYSTEMS

hot water association
CHARTER MEMBER

Benchmark places responsibilities on both manufacturers and installers. The purpose is to ensure that customers are provided with the correct equipment for their needs, that it is installed, commissioned and serviced in accordance with the manufacturers instructions by competent persons and that it meets the requirements of the appropriate Building Regulations. The Benchmark Checklist can be used to demonstrate compliance with Building Regulations and should be provided to the customer for future reference.

Installers are required to carry out installation, commissioning and servicing work in accordance with the Benchmark Code of Practice which is available from the Heating and Hot Water Industry Council who manage and promote the Scheme. Visit www.centralheating.co.uk for more information.

For further information on the HWA Charter Statement, please refer to the HWA website hotwater.org.uk.

ISSUE 01: MAY 2017

Section	Page
DESIGN	
Description	3
System Design	6
INSTALLATION	
Installation	8
Commissioning	18
USER INSTRUCTIONS	19
SERVICING AND MAINTENANCE	
Servicing and Maintenance	20
Fault Finding	21
Short Parts List	24
APPENDIX	
Appendix A	25
Appendix B	26
Warranty Information	27
Terms & Conditions	28
Benchmark Checklist	30
Benchmark Service Record	31

Manufacturer: Gledhill Building Products Ltd

Maximum inlet pressure to Pressure reducing valve	12 bar
Operating pressure (PRV setting)	3 bar
Expansion vessel charge pressure	3 bar
Expansion relief valve setting	4.5 bar
Opening pressure of P & T Relief Valve	6 bar
Opening temperature of P & T Relief Valve	89-96°C
Energy cut-out thermostat setting	82°C
Max. working pressure - Primary heat exchanger (Indirect models)	6 bar
Max. working pressure - Solar heat exchanger (Solar models)	10 bar
Immersion heater rating	3kW, 240V AC

All cylinders are manufactured in accordance with the requirements of BS EN 12897 The tundish must be positioned so that it is visible to the occupant and is away from electrical devices.

Components supplied with StainlessLite Plus Horizontal:
- Cold water inlet PRV combination valve/expansion relief
- Pressure and temperature relief valve
- Control thermostat / Energy cut-out thermostat
- Energy cut-out motorised valve (indirects only)
- Tundish
- 3kW Immersion heater including control and cut out thermostats
- Expansion vessel/mounting bracket/flexible hose
- Technical/user product literature

(**Note:** Please refer to tables 1 and 2 on pages 6-7 to confirm the quantity of immersion heaters supplied with the unit)

In any situation where the volume of heated pipework (eg. secondary circulation pipes or manifold pipework for multiple units) exceeds 10 litres, then an additional expansion vessel must be fitted to accommodate the extra expansion volume.

Handling Before Installation

StainlessLite Plus Horizontal must be handled with care and stored in a dry place. Any manual handling/lifting operations will need to comply with the requirements of the Manual Handling Operations Regulations issued by the H.S.E. The appliance can be moved using a sack truck on the rear face although care should be taken and the route should be even. In apartment buildings containing a number of storeys we would recommend that the appliances are moved vertically in a mechanical lift. If it is proposed to use a crane, expert advice should be obtained regarding the need for slings, lifting beams etc.

A specific manual handling assessment is shown in Appendix B at the rear of this manual.

Maintenance

Modifications should not be made to this product. Replacement parts, including immersion heaters, should be purchased from Gledhill Building Products Limited, or agents approved by them. Unvented hot water storage vessels need regular routine checks, and these are detailed below. It is for this reason that this manual must always be left with the StainlessLite Plus Horizontal.

It is essential that these checks be carried out at the time of boiler maintenance by a qualified installer:

1. Manually open the relief valves in turn, and check that water is discharged from the valves and runs freely through the tundish and out at the discharge point. Ensure that the valves re-seat satisfactorily. (Note - the water may be very hot).
2. It is important to check that the discharge pipework is carrying the water away adequately. Check for blockages etc. if it is not.
3. Turn the mains water off and remove and clean the strainer element in the Pressure Reducing Valve.
4. Check the charge pressure in the expansion vessel and repressurise if required
5. Re-fill the system and ensure that all relief valves have re-seated.
6. The Benchmark Service Record should be updated at each service.
7. Check the water pressure downstream of the combination valve is 3 bar in static condition.
8. Check and if necessary, descale the heat exchanger in hard water areas ie. above 200ppm (mg/l).

Note:

The cylinder is factory fitted with a temperature & pressure relief valve that must not be used for any other purpose or removed.

The cylinder is factory fitted with immersion heaters with thermal cut outs. Immersions without thermal cut outs must not be fitted.

DESIGN

Figure 1 - StainlessLite Plus Horizontal Indirect

StainlessLite Plus Horizontal is a range of unvented hot water storage cylinders, manufactured in the latest high quality duplex stainless steel. They are designed to provide mains pressure hot water and are supplied as a package which complies with Section G3 of the Building Regulations. The appliance is extremely well insulated using high density HCFC free foam insulation with an ozone depleting potential (ODP) of zero and a global warming potential (GWP) of 2. It is fitted with all necessary safety devices and supplied with all the necessary control devices to make installation on site as easy as possible.

StainlessLite Plus Horizontal is available in two basic variants:

1. **StainlessLite Plus Horizontal Indirect** - For use with gas or oil boilers (Figure 1). Unvented cylinders must not be used with solid fuel boilers or steam as the energy source.
2. **StainlessLite Plus Horizontal Indirect Solar** - For providing hot water by solar gains and gas or oil boilers (Figure 2). Unvented cylinders must not be used with solid fuel boilers or steam as the energy source.

StainlessLite Plus Horizontal Indirect

StainlessLite Plus Horizontal indirect is an unvented hot water storage cylinder and is provided with a high efficiency internal primary coil which is designed for use with a gas or oil boiler and is suitable for both open vented and sealed **pumped** primary systems.

When used with a sealed heating system the boiler must incorporate its own energy cut-out overheat thermostat.

StainlessLite Plus Horizontal indirect models are listed in the table on page 6 & 7.

Figure 2 - StainlessLite Plus Horizontal Indirect Solar

StainlessLite Plus Horizontal Indirect Solar

StainlessLite Plus Horizontal indirect is an unvented hot water storage cylinder and is provided with a high efficiency internal primary coil which is designed for use with a gas or oil boiler and is suitable for both open vented and sealed pumped primary systems.

When used with a sealed heating system the boiler must incorporate its own energy cut-out overheat thermostat.

A high efficiency second solar coil is positioned below the primary coil to ensure maximum benefit of solar gain energy.

StainlessLite Plus Horizontal indirect Solar models are listed in the table on page 6 & 7.

Each cylinder is provided with adrain fitting which must be installed prior to filling the unit, in the drain tapping. A hose may be fitted to drain the cylinder. **The drain down procedure must be followed.**

DESIGN

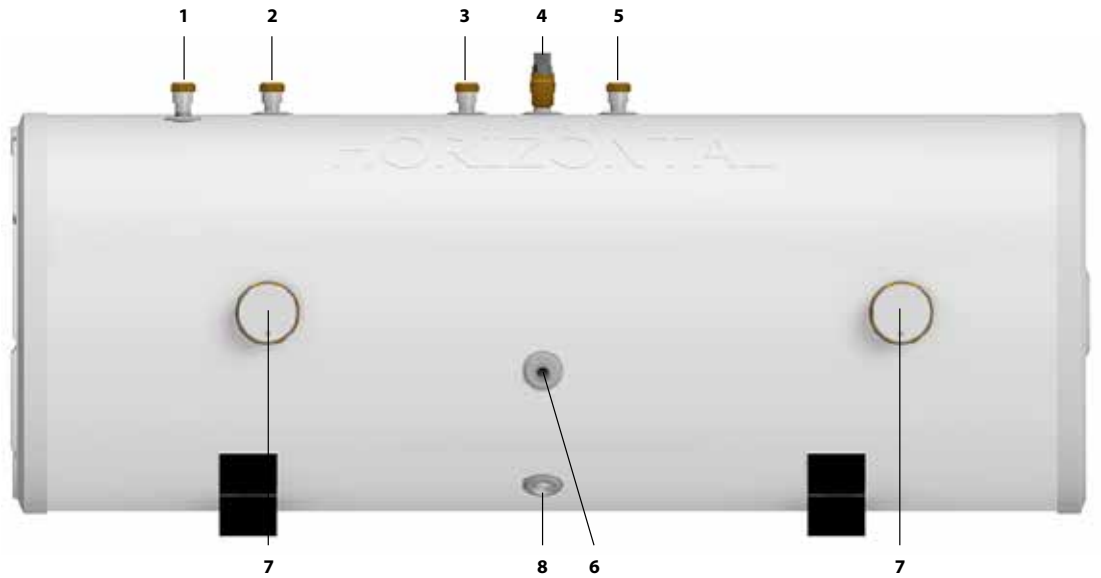

StainlessLite Plus Horizontal Indirect

Basic Appliance

1. Primary coil flow and return (22mm compression)
2. Secondary return (22mm compression)
3. Cold feed (22mm compression)
4. Lift up P&T relief valve outlet (15mm compression)
5. Hot supply (22mm compression)
6. Control stat pocket (22mm)
7. Immersion heater (1 3/4" female)
8. Drain (1/2" female)

Part G3 loose components supplied in a separate box

A. Combination inlet group incorporating pressure reducing valve, strainer, check valve, balance cold take off point, expansion relief valve and expansion vessel connection points.
B. Potable expansion vessels c/w flexible hose and integral wall bracket
C. Tundish
D. Dual control thermostat and combined overheat thermostat
E. Two port (22mm) zone valve for primary circuit
F. Wiring junction box for primary system

Model	Stock Code	Energy Efficiency Class	Heat Loss	Cylinder volume	Overall width	Overall height	Diameter	Weight empty	Weight full	Expansion vessel volume
			watts	Litres	mm	mm	mm	kg	kg	Litres
Indirect										
IND180	PLUIN180H	C	78	172	1306	585	550	29	201	18
IND210	PLUIN210H	C	82	206	1494	585	550	31	237	24
IND250	PLUIN250H	C	86	244	1744	585	550	35	279	24
IND300	PLUIN300H	C	91	288	1990	585	550	46	334	35
Indirect Solar										
IND180SOL	PLUIN180SH	C	78	170	1306	585	550	29	199	18
IND210SOL	PLUIN210SH	C	82	204	1494	585	550	31	235	24
IND250SOL	PLUIN250SH	C	86	244	1744	585	550	34	278	24
IND300SOL	PLUIN300SH	C	91	287	1990	585	550	45	332	35

NOTES

1. Recovery times based on Primary Coil/I.H. duty (ie. assumes the boiler output is adequate).
2. All connections are supplied with compression fittings for direct connection to copper pipework.
3. The diagrams shown are generic. For exact product specification refer to the table eg. the number of immersion heaters varies depending on model.

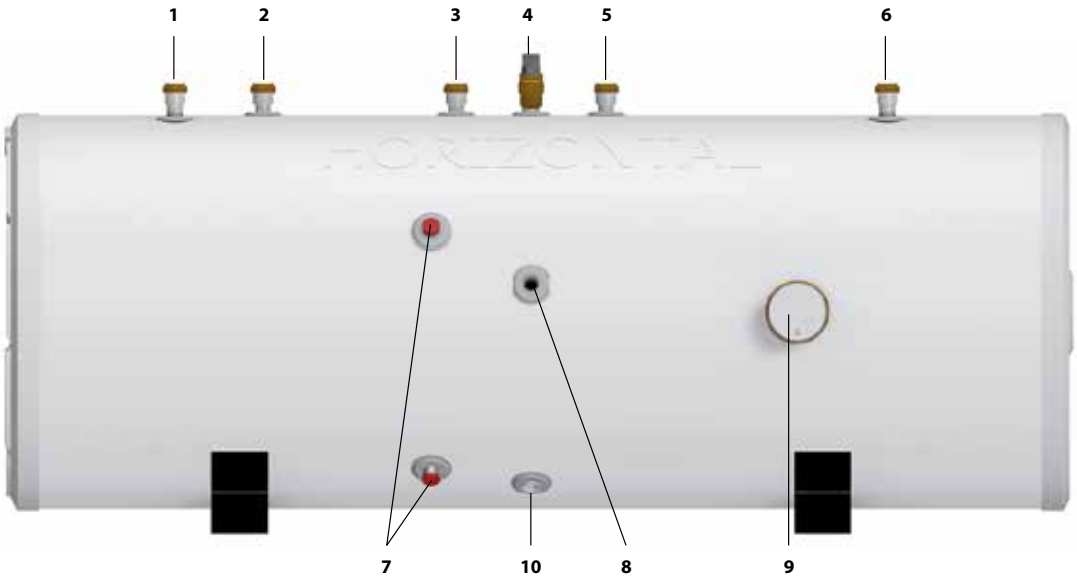

StainlessLite Plus Horizontal Indirect Solar

Basic Appliance

1. Primary coil flow and return (22mm compression)
2. Secondary return (22mm compression)
3. Cold feed (22mm compression)
4. Lift up P&T relief valve outlet (15mm compression)
5. Hot supply (22mm compression)
6. Solar coil flow and return (22mm compression)
7. Solar stat pocket (22mm)
8. Control stat pocket (22mm)
9. Immersion heater (1 3/4" female)
10. Drain (1/2" female)

Part G3 loose components supplied in a separate box

A. Combination inlet group incorporating pressure reducing valve, strainer, check valve, balance cold take off point, expansion relief valve and expansion vessel connection points.
B. Potable expansion vessels c/w flexible hose and integral wall bracket
C. Tundish
D. Dual control thermostat and combined overheat thermostat (x2)
E. Two port (22mm) zone valve for primary circuit
F. Wiring junction box for primary system

Pre-charge pressure of expansion vessel	Primary coil rating	Primary coil surface area	Primary coil pressure loss	Solar coil surface area	Solar coil pressure loss	Primary coil heat up time from 15°C to 60°C	Recovery time after 70% draw off	Volume produced by the primary coil	Dedicated solar volume	Immersion only heat up time from 15°C to 60°C	Immersion draw off volume	Number of immersions
bar	kW	m²	bar	m²	bar	min	min	litres	litres	min	litres	
3	18.4	0.78	0.21	n/a	n/a	27	27	165	n/a	103	90	1
3	20.9	0.97	0.19	n/a	n/a	27	26	285	n/a	140	120	1
3	20.3	1.27	0.28	n/a	n/a	36	26	205	n/a	82	120	2
3	21.6	1.27	0.31	n/a	n/a	32	28	225	n/a	184	140	2
3	15.4	0.59	0.33	0.49	0.21	21	21	110	64	114	100	1
3	16	0.59	0.33	0.49	0.21	24	23	115	85	131	115	1
3	20.2	0.78	0.28	0.59	0.25	38	36	133	112	153	135	1
3	17.7	0.78	0.28	0.59	0.25	26	26	140	145	182	160	1

4. Heat up and recovery times based on 0.25 l/s primary flow rate and at 82°C flow temperature.

INSTALLATION

General Design Considerations

The unit must be installed on the supports provided. The supports must be aligned with the embossed marking. This ensures that the pressure and temperature relief valve is vertical in the cylinder. The base chosen for the cylinder should be level and capable of supporting the weight of the unit when full of water as shown in General Data. The discharge pipework for the safety valves must have a minimum fall of 1 : 200 from the unit to a safe discharge point. All exposed pipework and fittings on the cylinder should be insulated, and the unit should NOT be fixed in a location where the contents could freeze.

In new systems, pipes should be insulated to comply with building regs, the maximum permissible heat loss is indicated in the table opposite, and labelled accordingly as follows:

i. Primary circulation pipes for domestic hot water circuits should be insulated through their length, subject only to practical constraints imposed by the need to penetrate joists and other structural elements.
ii. All pipes connected to hot water storage vessels, including the discharge vent pipe, should be insulated for at least 1 metre from their points of connection to the cylinder (or they should be insulated up to the point where they become concealed).

In replacement systems, whenever a boiler or hot water storage vessel is replaced in an existing system, any pipes that are exposed as part of the work or are otherwise accessible should be insulated as recommended for new systems, or to some lesser standard where practical constraints dictate.

Insulation of pipework	
Pipe outside diameter	**Maximum heat loss**
15mm	7.89W/m
22mm	9.12W/m
28mm	10.07W/m
35mm	11.08W/m

The pipe connecting the boiler flow to the appliance must not be less than 22mm copper or equivalent.

Further guidance on converting heat loss limits to insulation thickness for specific thermal conductivities is available in TIMSA "HVAC guidance for achieving compliance with Part L of the Building Regulations".

Mains Water Supply

Existing properties with a 15mm supply will be satisfactory provided the local mains pressure is good, but should be confined to single bathroom properties. For new properties where simultaneous demand is required to more than one bathroom or a bathroom and one or more en-suites, the communication and service pipe into the dwelling should be a minimum of 22mm (usually in the form of a 25mm MDPE supply). The optimum performance is achieved if the inlet pressure is 3 bar dynamic. However, the StainlessLite Plus Horizontal will function with lower inlet pressures, but this will reduce the performance. For optimum performance, 30L per minute incoming mains flow should be present, however the StainlessLite Plus Horizontal will work at lower flow rates, although performance will be affected. Normally StainlessLite Plus Horizontal provides well in excess of 40 litres/min in most conditions. Flow rates for ALL mains pressure systems are subject to district pressures and system dynamic loss. Particularly on larger properties with more than one bathroom, the pipe sizes should be calculated in accordance with BS EN 806-3:2006 and BS 8558:2011.

Standard Model Selection Guide		
Max hot water demand	**Max number of bed spaces (Bedrooms)**	**Indirect litres**
1 bathroom + 2 separate shower rooms or 2 bathrooms	7 (5)	180
2 bathrooms + separate shower room	7 (5)	210
2 bathrooms + 2 separate shower rooms	7 (5)	250
3 bathrooms	9 (6)	300

Solar Model Selection Guide		
Max hot water demand	**Bedrooms**	**Indirect litres**
1 bathroom	1-3	180
1 bathroom + 1 shower room	1-3	210
1 bathroom + 2 shower rooms	2-4	250
2 bathrooms + 1 shower room	3-4	300

Model	Support spacing	Support width	Protrusion from cylinder			Clearance allowance				Minimum cupboard size		
			Immersion	PTRV	Aquastat	Rear	End	Top	Front	Width	Depth	Height
	mm	mm	mm	mm	mm	mm	mm	mm	mm	mm	mm	mm
180	700	80	70	80	90	150	150	300	450	1610	1100	885
210	815	80	70	80	90	150	150	300	450	1795	1100	885
250	970	80	70	80	90	150	150	300	450	2045	1100	885
300	1120	80	70	80	90	150	150	300	450	2292	1100	885

General Restrictions

a. The highest hot or cold water draw off point should not exceed 10 metres above the Pressure Reducing Valve.
b. An ascending spray type bidet or any other appliance with a Class 1 back-syphonage risk requiring a type A air gap should not be used.
c. StainlessLite Plus Horizontal should not be used where steam is the primary heating medium, or in a situation where maintenance is likely to be neglected.
d. Unvented cylinders are not suitable for use with solid fuel boilers.
e. **If the supply to the mixer fittings (other than a dual outlet type) is not taken from the balanced supply the system will become over pressurized and cause the pressure relief valve to discharge. Over time this could also cause the premature failure of the appliance itself which will not be covered by the warranty.**
f. In larger properties with a number of bathrooms/en-suites and long pipe runs we would recommend that the balanced cold supply is provided with its own pressure reducing valve and is not taken from the balanced cold connection on the combination valve. In this case it will also be necessary to fit a small expansion vessel on the balanced cold water system to accommodate the pressure rise caused by the increase in temperature of the balanced cold water.
g. Check the performance requirements of the terminal fittings with regard to flow/pressure are suitable.
h. In relation to potable water systems, expansion vessels shall be installed in a vertical orientation and located so that the length of the connecting pipe work is kept to a minimum.

Shower Fittings

Aerated taps are recommended to prevent splashing. Any type of shower mixing valve can be used as long as both the hot and cold supplies are mains fed. However, all mains pressure systems are subject to dynamic changes particularly when other hot and cold taps/showers are opened and closed, which will cause changes in the water temperature at mixed water outlets such as showers. For this reason and because these are now no more expensive than a manual shower we strongly recommend the use of thermostatic showers with this appliance. These must be used in 3 storey properties where the impact on pressure/temperature of opening another tap in the system is greater than normal. The shower head provided must also be suitable for mains pressure supplies.

Pipe Layout

In all mains pressure installations it is important to remember that the incoming cold supply must be shared between all terminal fittings. It is important that a 22mm supply is brought to the appliance and a 22mm take-off is continued at least to the bath. If there are two baths, 28mm pipework should be considered. One metre of smaller diameter pipework, or flow restrictors, should be provided on the final connection to all outlets so as to balance the water available. In any event the distribution pipework should generally be in accordance with BS EN806-1 to 5.

Plastic Pipework

This appliance is suitable for use with plastic pipework as long as the material is recommended for the purpose by the manufacturer and is installed fully in accordance with their recommendations.

Secondary Hot Water Circulation

All models 210 and above are fitted with a secondary return tapping as standard (see tables 1 and 2 for details). If fitted, an extra expansion vessel may be necessary. A non-return valve MUST be FITTED near the return connection. No valve or terminal fitting should be installed between the non return valve and the cylinder. (See schematic arrangement on page 15.) All pipes kept hot by the secondary circulation should be insulated.

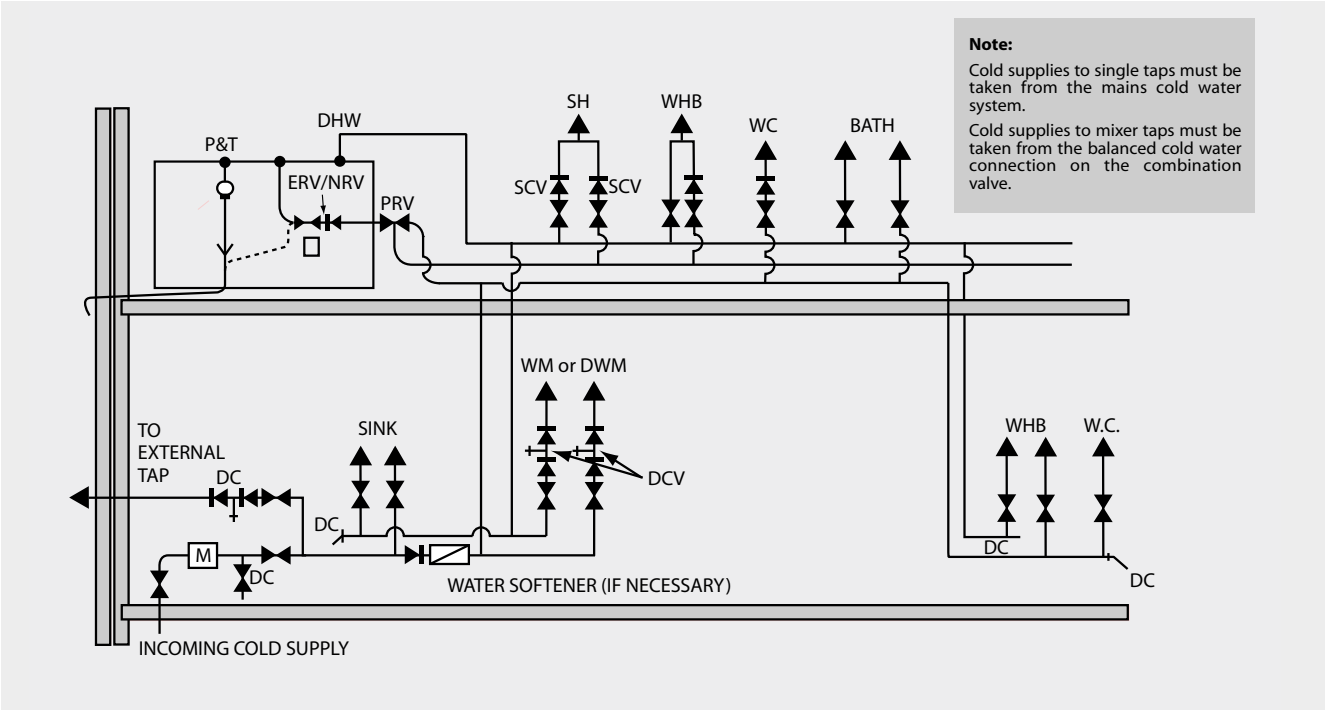

INSTALLATION

Typical Discharge Pipe Arrangement

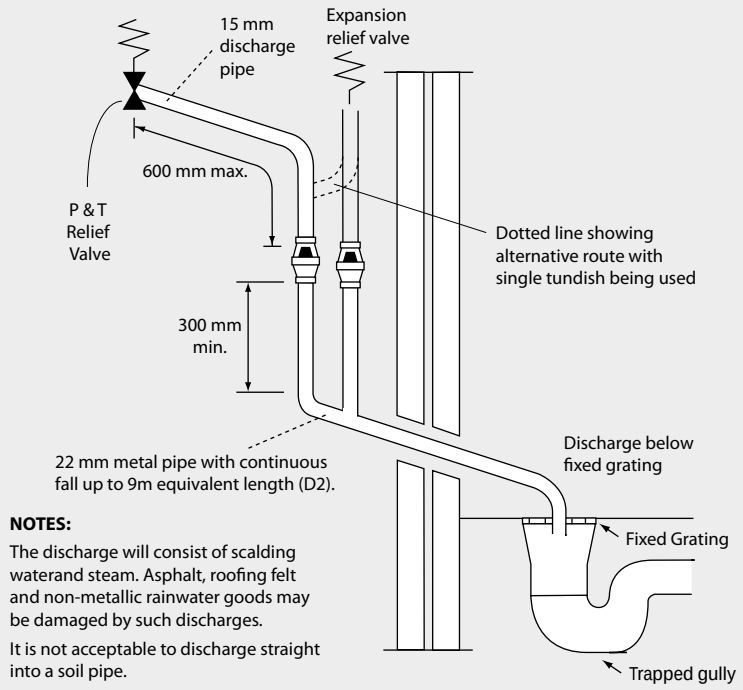

NOTES:

The discharge will consist of scalding waterand steam. Asphalt, roofing felt and non-metallic rainwater goods may be damaged by such discharges.

It is not acceptable to discharge straight into a soil pipe.

Worked Example

The example below is for G1/2 temperature relief valve with a discharge pipe (D2) having 4 elbows and length of 7m from the tundish to the point of discharge.

From the table below:

Maximum resistance allowed for a straight length of 22mm copper discharge pipe (D2) from a G1/2 temperature relief valve is: 9m subtract the resistance for 4 x 22mm elbows at 0.8m each = 3.2m.

Therefore the maximum permitted length equates to: 5.8m.

5.8m is less than the actual length of 7m therefore calculate the next largest size.

Maximum resistance allowed for a straight length of 28mm pipe (D2) from a G1/2 temperature relief valve equates to: 14m.

As the actual length is 7m, a 28mm (D2) copper pipe will be satisfactory.

Sizing of copper discharge pipe 'D2' for a temperature relief valve with a G1/2 outlet size (as supplied)		
Size of discharge pipework	Maximum length of straight pipe (no bends or elbows)	Deduct the figure below from the maximum length for each bend or elbow in the discharge pipe
22mm	Up to 9m	0.8m
28mm	Up to 18m	1m
35mm	Up to 27m	1.4m

Pressure & Temperature/expansion Relief Valve Pipework

The relief valve should be installed to discharge in accordance with G3 of the Approved Document of the Building Regulations and should be piped to where it is visible, but will not cause danger to persons or damage to materials.

The following information is taken from Approved Document G3 of the Building Regulations and is provided to assist with the design and installation of the discharge pipework. However, the information is not exhaustive and reference should always be made to Approved Document G3 of the Building Regulations. The final decision regarding any arrangements rests with Building Control and it is recommended that their advice is sought if you have any concerns regarding this aspect of the installation.

The two safety valves will only discharge water under fault conditions. When operating normally water will not be discharged.

The tundish should be vertical, located in the same space as the unvented hot water storage system and be fitted as close as possible and within 600mm of the safety device e.g. the temperature relief valve.

The discharge pipe (D2) from the tundish should terminate in a safe place where there is no risk to persons in the vicinity of the discharge, be of metal and:

a) Be at least one pipe size larger than the nominal outlet size of the safety device unless its total equivalent hydraulic resistance exceeds that of a straight pipe 9m long i.e. discharge pipes between 9m and 18m equivalent resistance length should be at least two sizes larger than the nominal outlet size of the safety device, between 18 and 27m at least 3 sizes larger, and so on. Bends must be taken into account in calculating the flow resistance. Refer to the table and the worked example.

   An alternative approach for sizing discharge pipes would be to follow BS EN 806-2:2005 Specification for design installation, testing and maintenance of services supplying water for domestic use within buildings and their curtilages.

b) Have a vertical section of pipe at least 300mm long, below the tundish before any elbows or bends in the pipe work.

c) Be installed with a continuous fall.

d) It is preferable for the discharge to be visible at both the tundish and the final point of discharge but where this is not possible or practically difficult there should be clear visibility at one or other of these locations. Examples of acceptable discharge arrangements are:

1. Ideally below the fixed grating and above the water seal in a trapped gulley.

2. Downward discharges at a low level; i.e. up to 100mm above external surfaces such as car parks, hard standings, grassed areas etc are acceptable providing that where children play or otherwise come into contact with discharges, a wire cage or similar guard is positioned to prevent contact whilst maintaining visibility.

3. Discharges at a high level; e.g. into metal hopper and metal down pipe with the end of the discharge pipe clearly visible (tundish visible or not) or onto a roof capable of withstanding high temperature discharges of water and 3m from any plastic guttering systems that would collect such discharges.

4. Where a single common discharge pipe serves more than one system, it should be at least one pipe size larger than the largest individual discharge pipe (D2) to be connected.

5. If unvented hot water storage systems are installed where discharges form safety devices may not be apparent i.e. in dwellings occupied by blind, infirm or disabled people, consideration should be given to the installation of an electronically operated device to warn when discharge takes place.

Combination Inlet Group

Combines elements 1, 2 and 3 below.

1. *Pressure Reducing Valve* - The cold water supply to any mixer taps/showers must be taken from the cold water tapping of this valve to ensure balanced hot and cold pressures. This valve is factory set to ensure the correct operating pressure for the StainlessLite Plus Horizontal.

2. *Non Return Valve* - This is integral with the pressure reducing valve to prevent backflow of hot water towards cold water draw off points.

3. *Cold Water Expansion Relief Valve* - This safety device is preset at the factory and will relieve excess cold water pressure resulting from a fault condition.

Safety

The safety devices supplied or fitted on an StainlessLite Plus Horizontal are selected for their suitability for the temperatures and pressures involved. They must not be changed, removed or by-passed and it is essential that only genuine replacement parts supplied or approved by Gledhill Building Products Limited are used. This includes the immersion heaters, which must incorporate an energy cut-out. All parts are available to approved installers from Gledhill Building Products Limited, Sycamore Estate, Squires Gate, Blackpool (Telephone 01253 474402).

Expansion Vessels Installation

To prevent water stagnation and particulate accumulation affecting water quality, it is recommended that the expansion vessel be installed in the vertical orientation so that the fitting accommodating thermal expansion or a pressure surge is:-

1. bottom fed and upright; and
2. that the connecting pipework to the fitting:-
   - rises continuously; and
   - is kept to a minimum;

2 expansion vessels on 400 litre Models

All 400 litre models are supplied with two 24 litre expansion vessels. These can be coupled together and fitted to the expansion vessels tapping on the combination inlet valve, or by some other means on the cold/hot water inlet pipework. There must be no valve on the pipe work between the expansion vessels and the unvented cylinder which could prevent the expansion of the water contained in the unvented cylinder reaching the expansion vessels.

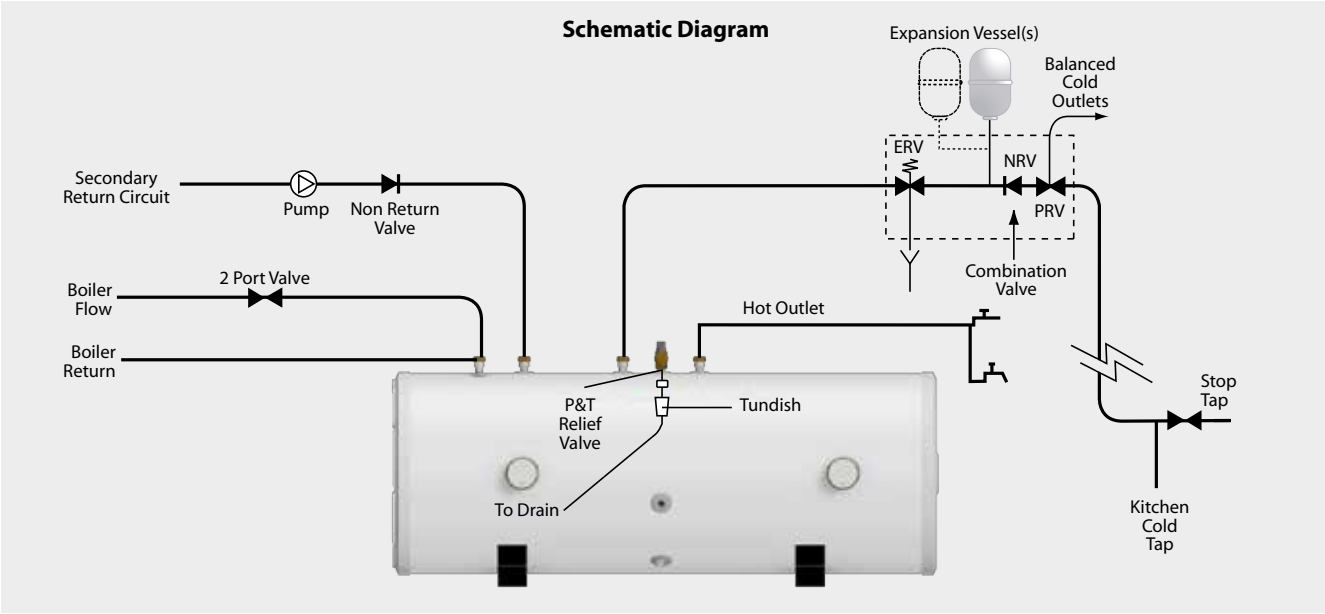

INSTALLATION

Pressure & Temperature Relief Valve

This safety device is also pre-set at the factory and relieves before the temperature reaches 100°C. It is also a Pressure Relief Valve, and is pre-set to 6 bar.

Please Note

The pressure and temperature relief valve for the vertical StainlessLite Plus models is not compatible with the horizontal StainlessLite Plus.

Immersion Heaters

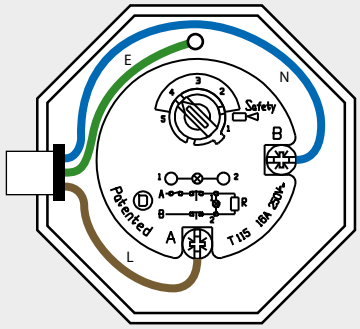

Thermostat Type TSE fitted in the indirect cylinders - is supplied set in position 5 at 60°C ± 4°C.

When ordering a replacement part the TSR thermostat type will be supplied with the immersion heater.

Immersion Heater Wiring

The immersion heaters fitted to our units are 3kW 240V ~AC. Check that the mains supply conforms to this, and all external wiring conforms to the most recent revision of the IEE wiring regulations. An Incoloy element is used on this product for standard domestic use and water conditions.

The immersion heater is fitted into the hot water cylinder using an O-ring. After the unit is filled with water check for leaks to determine if the O-ring has sealed and tighten carefully using the appropriate tool. To prevent damage to the O ring do not use excessive force to tighten the immersion heater.

The immersion heater is supplied with a thermostat which has been tested for operation in the cylinder and complies with the European directives for Electromagnetic compatibility and radio interference. It is Rated at 16 Amp 250V ~AC. The immersion thermostat has two terminals A and B. The Live (brown) wire should be connected to terminal A and the Neutral (blue) wire should be connected to terminal B. It has been our experience that Crimp terminals make better connections. The immersion heater must be fully earthed (earth post) and connected via a double pole isolator switch having a contact separation at least 3mm, see diagram opposite.

Danger of electrocution: before making any adjustments to the thermostat isolate the immersion heater from the mains electricity supply at the fuse spur unit.

The immersion heater thermostats incorporate a manual reset safety/overheat cut out thermostat. Should this operate, investigate the cause before pressing the red reset button labelled safety. If there is no apparent fault adjust the control setting down slightly to prevent nuisance tripping.

If another heat source is used to heat the cylinder and this is allowed to raise the water temperature excessively then the overheat thermostat will trip. This is likely on solar thermal products when the solar thermostats are set at high temperatures.

Line Strainer

This is integral within the combination inlet group to reduce the likelihood of contaminants fouling the valve seat. Following installation this line strainer must be cleaned and replaced. This needs to be carried out on a regular basis. as part of the annual maintenance/service check.

Tundish

This is to allow the discharge from any Relief Valve to be seen. It must be fitted away from any electrical devices. See page 14 for discharge pipework details.

Safety

The immersion heaters must be earthed and they must be isolated from the mains before the cover is removed on every occasion. Replacement immersion heaters should be obtained from Gledhill Building Products Limited.

Important

Failure to follow the drain down procedure will invalidate the warranty.

NEVER drain the cylinder of hot water and then close all cylinder inlets and outlets.

REASON as the air remaining in the cylinder cools the pressure inside the cylinder will fall below atmospheric and cause damage to the cylinder.

NEVER close the cold main and drain the cylinder via any tap connected to it.

REASON as the water drains, the pressure inside the cylinder may decrease below atmospheric and this may cause damage to the cylinder.

In line with good plumbing practice, use of excessive flux should be avoided.

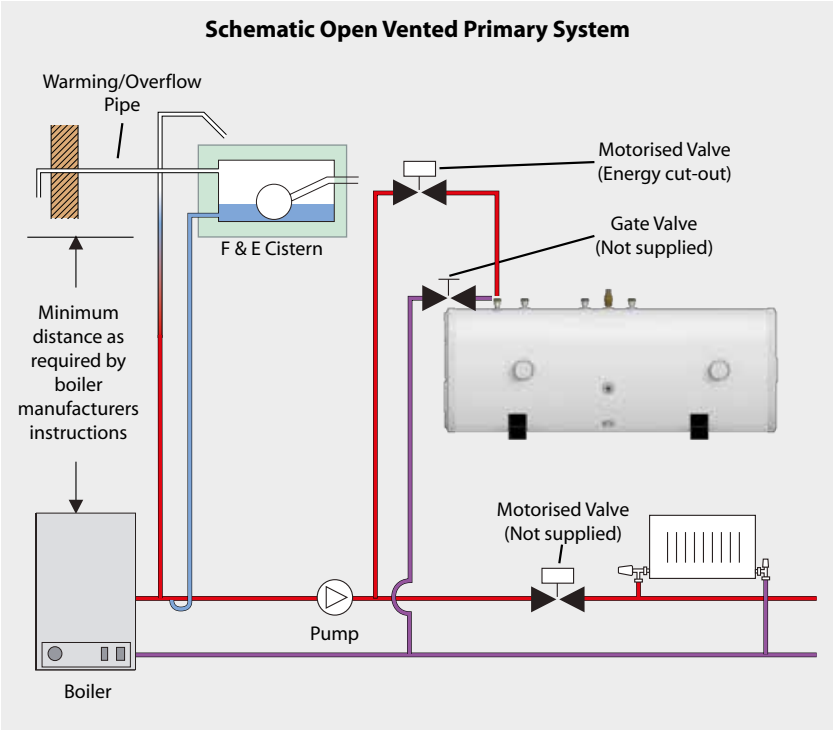

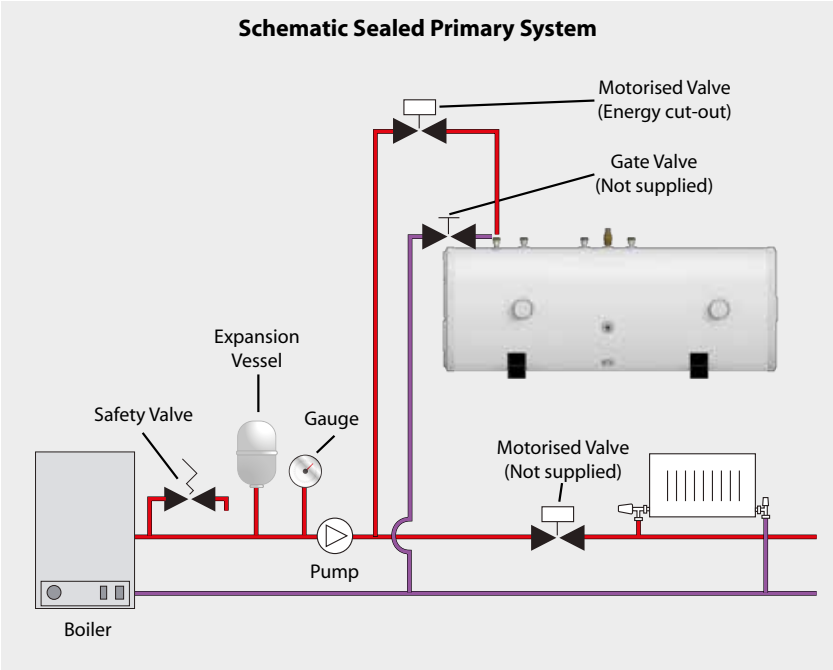

Heating/primary Systems

The boiler and primary/heating systems should be sized and installed in accordance with BS EN 12828:2003, BS EN 12831:2003 & BS EN 14336:2004.

Safety

StainlessLite Plus Horizontal is fitted with a Combined Temperature/Pressure Relief Valve to cope with any increase in system temperature and pressure above the design limitations, when used with boilers up to 45kW output, which is the maximum allowed by section G3 of the Building Regulations. The primary water temperatures should be controlled as outlined below.

Primary Circuit

It is essential that the circuit between the boiler and the StainlessLite Plus Horizontal is pumped. The motorised zone valve supplied should be fitted adjacent to the unit and controlled by the cylinder thermostat supplied. The thermostat and motorised valve must be wired so that they both switch off should an overheat situation develop. It is important to follow the wiring diagram in the Wiring Section of these instructions.

Sealed Primary Circuit

Any boiler used must be fitted with an over temperature cut-out. Unvented primary circuits may be filled or replenished by means of a temporary connection between the circuit and a supply pipe provided a 'Listed' double check valve or some other no less effective backflow prevention device is permanently connected at the inlet to the circuit and the temporary connection is removed after use.

Alternatively, a CA device can be used, which will allow the system to be permanently connected to the cold mains supply. The primary system can then be topped up, when required, in the same way as an open vented system fitted with an F&E Cistern.

Gate Valve

All our cylinders are tested to BS EN 12897 at 15 l/mim.

In extreme situations where excessive flow rates, above 25 l/min are present, then a gate valve on the return from the cylinder to the boiler, before it joins the central heating return, may be required to reduce excessive flow rates and therefore any potential noise problems.

INSTALLATION

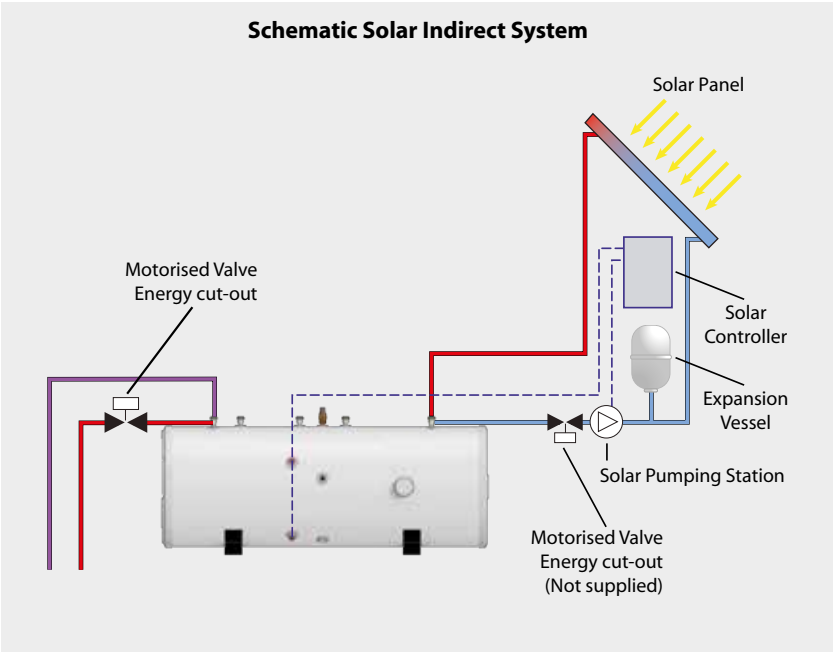

All components in a solar primary system must be marked or identifiable in such a way that their design pressure and temperature can be readily determined.

A pressure relief valve to control the risk of over-pressure in system components should be fitted. A termination from a pressure relief valve should minimise the risk of damage to persons or materials. Suitable locations are into a high temperature receptacle, an internal gully or externally at ground level. High level termination from walls or on roofs could cause injury to people or animals below if the valve were to release scalding water and steam.

The pipe leading to the safety device and the collector should be of rigid and non-deformable construction, without any possibility of restriction or closure by any other fitted component.

A more detailed diagram of our recommended arrangement for a typical solar system is shown on page 20.

This provides all the necessary controls and safety devices necessary for the solar system i.e. the two port zone valve is wired as an energy cut out and the pump/valve will only allow heat transfer as required under control of the solar controller.

The solar pocket provided accommodates an 8mm diameter sensor which, with the sensor located in the solar collector (or in the flow pipe immediately adjacent to the collector), will provide the information required by the solar controller.

Note: If the motorised valve is not used then any factory built hydraulic station for solar use MUST be fitted with suitable non-return valves in both flow and return pipes to prevent gravity circulation when the pump is not running.

If there is a possibility of the solar controller that you install causing the cylinder temperature to exceed 80°C, under normal working conditions, then a Solar tempering valve must be fitted to the domestic hot water outlet of the cylinder. This must limit the hot water temperature to a maximum of 60°C.(ref building regulations part G3 3.63). This product can be supplied from Gledhill part number XC007 which has a inlet temperature limit of 100°C. Suitable plumbing configurations for installing this valve are shown on page 19 of this manual. NB. Any fitted Overheat thermostats may require resetting in the winter months to enable backup heat sources to heat the cylinder.

Figure 1: Cold port of the blending valve connected to mains supply NOT ALLOWED

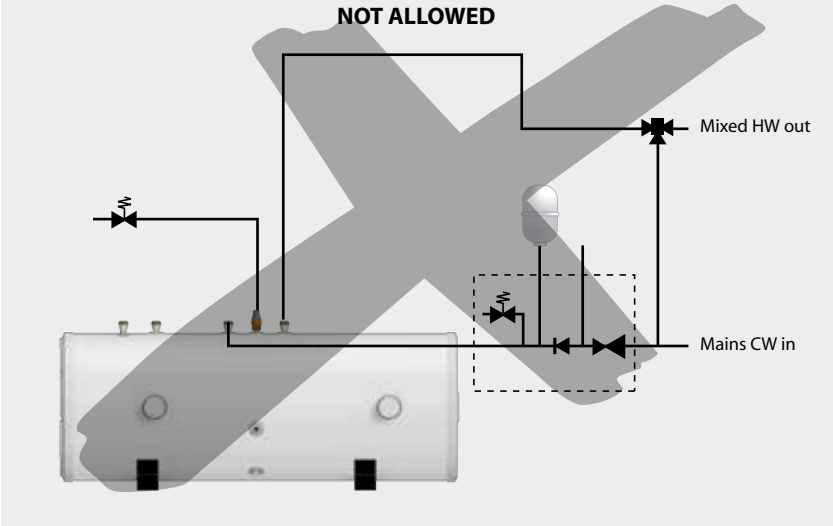

Figure 2: Cold port of the blending valve connected to balanced cold supply - NON-RETURN VALVE MUST BE FITTED

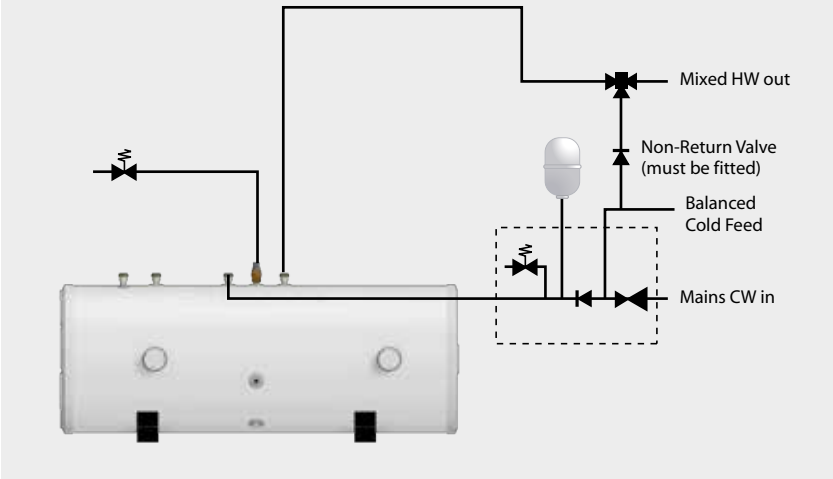

Figure 3: Cold port of the blending valve connected to mains supply to the vessel after the inlet control group

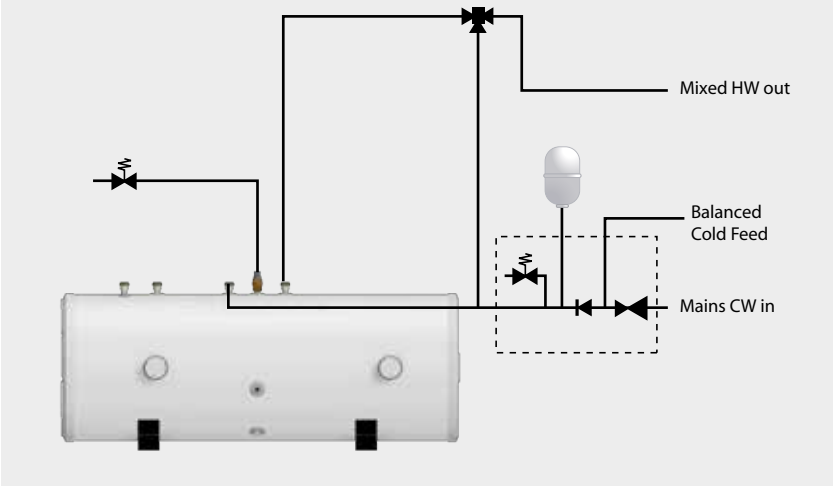

Fitting Blending Valves To The Unvented StainlessLite Plus Horizontal Appliances

When fitting a blending valve to the unvented appliances, it is important that the installation does not contravene the G3, WRC and Health and Safety directives or the manufacturers recommendations. If this is the case, then the warranty should be null & void. The key requirements to comply with these regulations are: -

1. Any fitting or material in contact with potable water (e.g. a blending valve) must be approved by WRC or an equivalent body.
2. Connections or wiring arrangements must not bypass any safety devices.
3. Any expansion due to heating must not be allowed to expand back into the cold mains.
4. The settings of any safety devices must not be tampered with or adjusted.

Figure 1 shows the cold water port of the blending valve connected to the mains cold water supply before the inlet control group. This arrangement is completely unacceptable and illegal because: -

- the water is allowed to expand in to mains cold water supply.
- the vessel will be charged to the incoming mains supply which may be considerably higher than the working pressure of the vessel.

If this arrangement is used then the Gledhill warrant will not be valid.

Figures 2 & 3 opposite shows how the blending valve can be piped onsite.

Figure 2 shows the cold water port of the blending valve connected to the balanced cold water outlet. This arrangement will only be acceptable if a WRAS approved non-return valve is fitted, otherwise: -

- during the heating cycle, the water will expand back into the mains supply, as the regulating valve must not be relied upon to act as a check valve under all operating conditions.
- depending upon the characteristics of the blending valve, hot water may also flow from the balanced cold water taps.

Figure 3 shows the cold port of the blending valve connected to the cold water supply to the vessel after the inlet control group. This should be the preferred method. It is recommended that the installer should ensure that there is no gravity circulation in the pipework connected to the cold port. If necessary, this can be achieved by fitting a non-return valve or using a thermal trap.

INSTALLATION

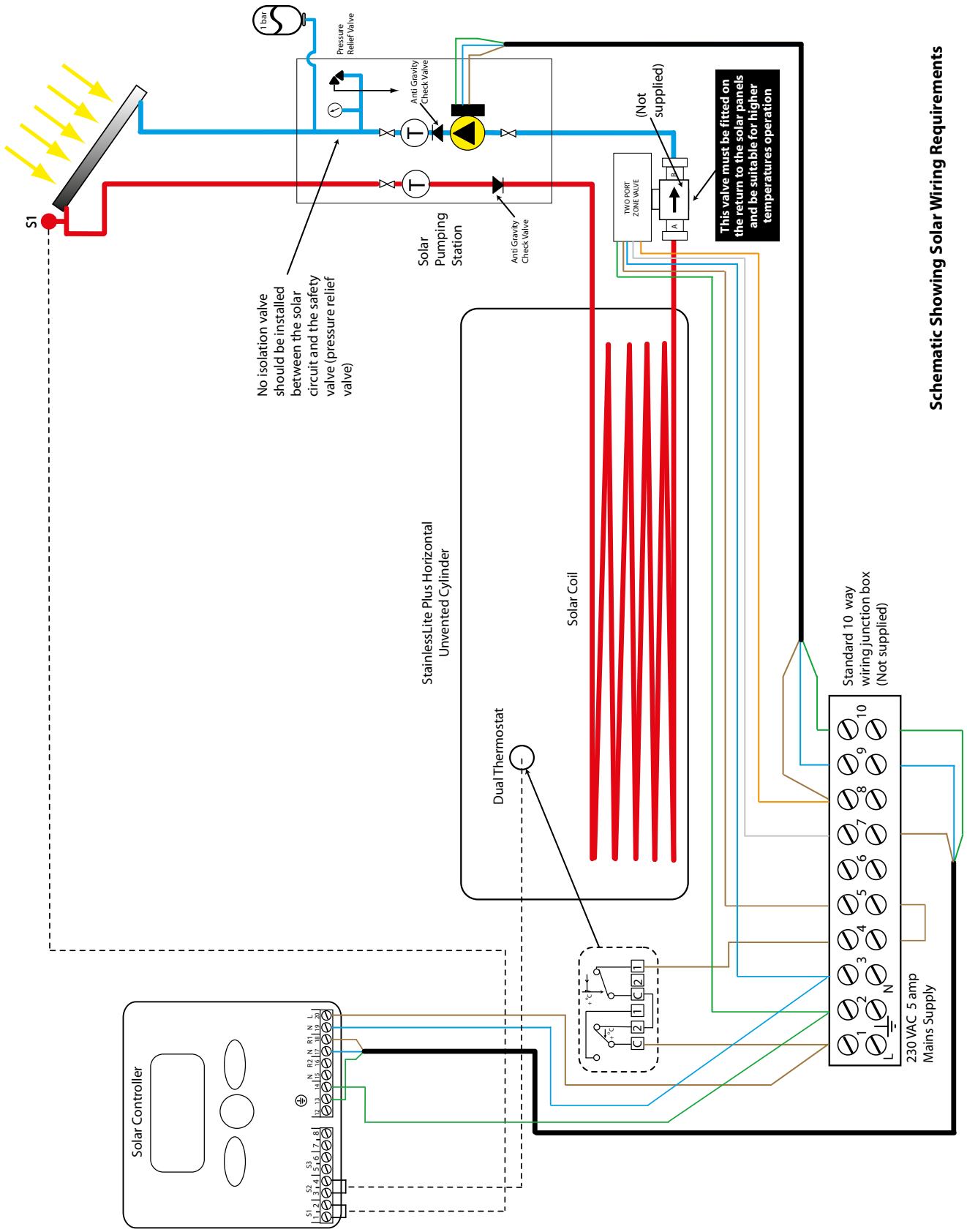

(S-PLAN) WIRING DIAGRAM WITH TWO 2 PORT VALVES AND BOILER CONTROLLED PUMP OVERRUN OPTION

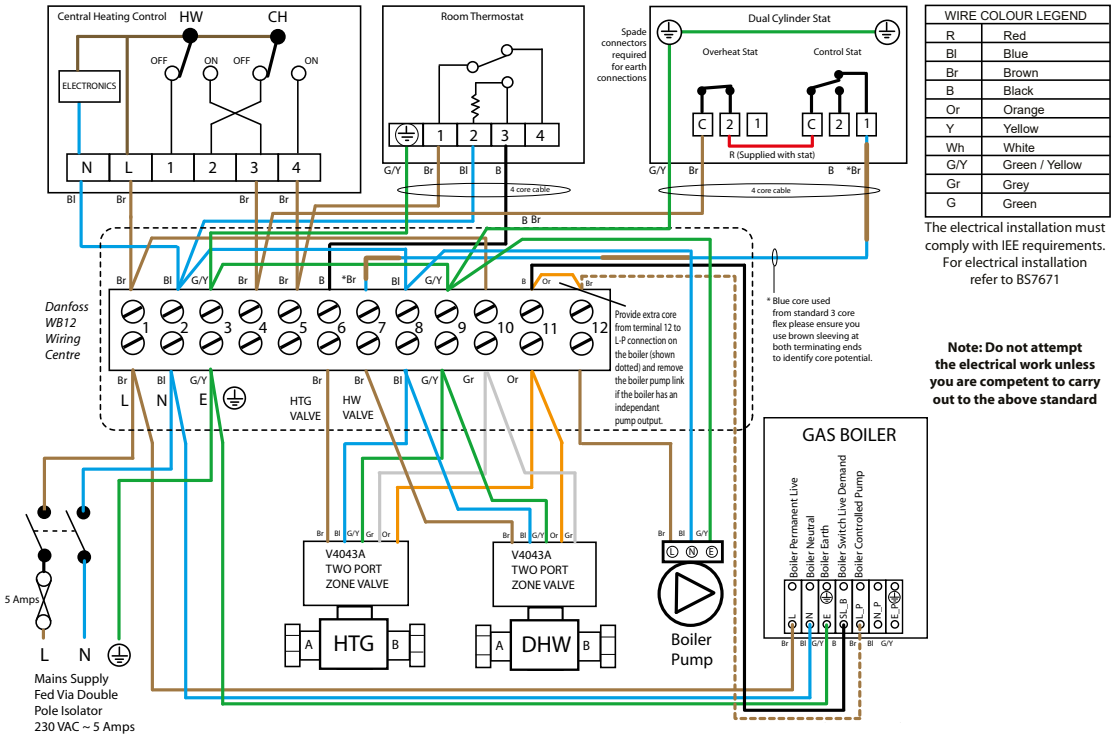

Typical schematic wiring diagram for an unvented installation

(Y-PLAN) WIRING DIAGRAM WITH 3 PORT VALVE/2 PORT SAFETY VALVE AND BOILER CONTROLLED PUMP OVERRUN OPTION

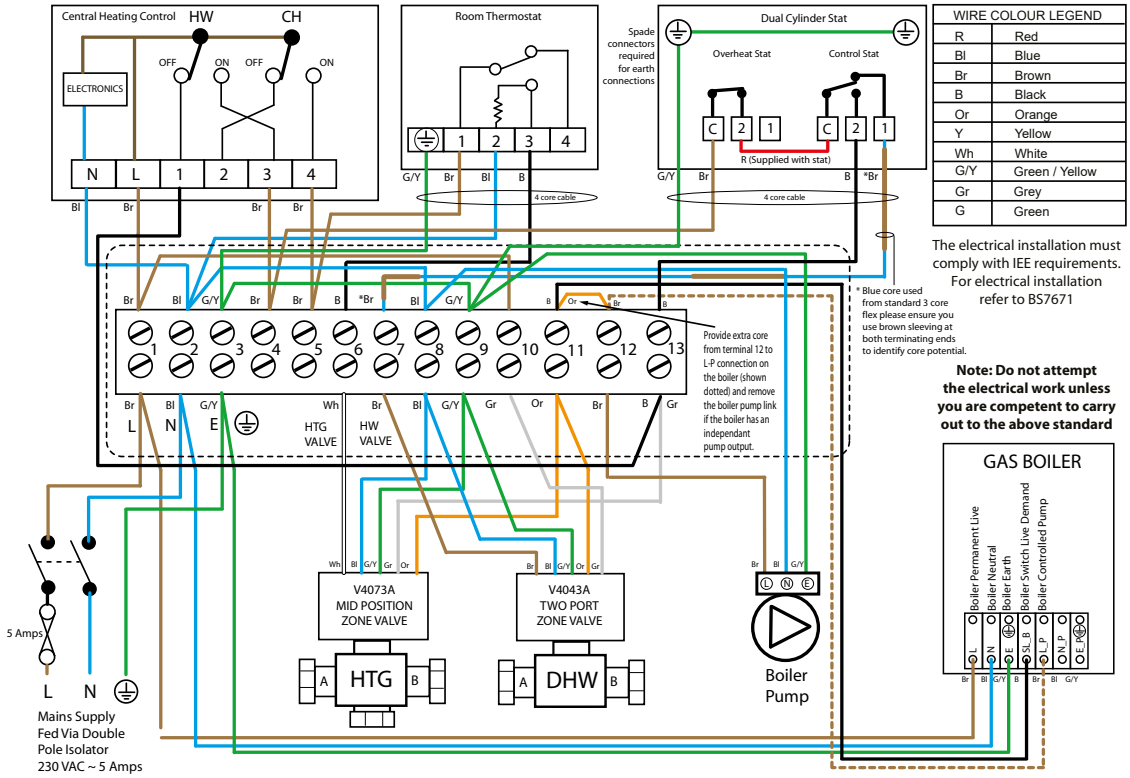

Typical schematic wiring diagram for an unvented installation

INSTALLATION

Connections can come loose in transit, and all should be checked before installation.

The control thermostat for indirect heat exchanger heat up of our cylinders are usually set at between 60°C - 65°C. During commissioning the actual temperature that the cylinder reaches when the thermostat(s) operate should be tested and adjusted so that it achieves a minimum of 60°C. This temperature needs to be achieved on a regular basis.

Check the pressure on the air side of the expansion vessel = 3 bar. This must be done when the water in the cylinder is free to expand in atmospheric pressure or the cylinder and relevant pipe work is empty.

Check that the drain cock is closed, and open all the cold and hot water taps and other terminal fittings. Allow the system to fill with water, and to run until there is no air left in the system. Close the taps and inspect the system closely for leaks.

Manually open the Relief Valves one by one and check that water is discharged and run freely through the tundish and out at the discharge point. The pipework should accept full bore discharge without overflowing at the tundish, and the valve should seat satisfactorily.

In line with good plumbing practice, use with excessive flux should be avoided. When soldering above the cylinder, ensure flux/solder does not contaminate the cylinder below, since this can cause corrosion. Flushing should be done performed as per BS EN 806:4 2010 section 6.2.

Allow the cylinder to heat to normal working temperature, then thoroughly flush the domestic hot and cold water pipework through each tap.

NOTE: If this appliance is to be installed in other than a single domestic dwelling ie. in an apartment block or student flats etc., the hot and cold water system will need to be disinfected in accordance with BS EB 806:4 2010 section 6.3 and the Water Regulations.

Because the StainlessLite Plus Horizontal appliance is stainless steel, the use of chlorine as the disinfection agent can cause damage unless the appliance is adequately flushed and refilled with the mains water immediately on completion of the disinfection procedure. Damage caused through a failure to do this adequately will not be covered by the warranty.

For the reasons mentioned, we recommend the use of a non chlorine based disinfectant such as Fernox LP Sterox as manufactured by Cookson Electronics when carrying out disinfection of systems incorporating these appliances.

Remove the filter from the combination inlet group clean and replace. Refill the system and open all hot taps until there is no air in the pipe work. **ENSURE CYLINDER IS DRAINED PRIOR TO CHECKING OR REMOVING FILTER FROM THE COMBINATION INLET GROUP**.

Allow the cylinder to heat to normal working temperature with whatever heat source is to be used, and check again for leaks. The pressure relief valve or the P&T valve should not operate during the heating cycle. If the P&T valve operates before the pressure relief valve due to high pressure, check that the inlet control group is fitted correctly, and no valve is between the inlet control group and the cylinder.

The boiler/heating systems should be filled and commissioned in accordance with good practice following the guidance in BS 7593:2006/the boiler manufacturers instructions. This includes adequately flushing the system to remove any debris that may have been introduced during installation/maintenance.

NOTE

At the time of commissioning, complete all relevant sections of the Benchmark Checklist located on the inside back pages of this document.

This must be completed during commissioning and left with the product to meet the Warranty conditions offered by Gledhill.

IMPORTANT - DRAIN DOWN PROCEDURE

1. Switch off both the boiler and the immersion heater
2. Open the nearest hot tap and run all hot water until cold, then close it
3. Close the incoming cold main at the stop tap
4. **Hold open the pressure and temperature relief valve until water stops discharging into the tundish and leave it open**
5. Open the cold taps starting from the highest point and working down to the lowest tap, leaving them open
6. When the cold taps have stopped draining, open the hot taps starting from the highest and working down to the lowest tap
7. Open the drain cock and ensure the pressure and temperature relief valve is held open until the cylinder is empty

Your StainlessLite Plus Horizontal unvented cylinder is automatic in normal use, but requires routine maintenance which is normally carried out at least annually along with the boiler service. The maintenance must be carried out by a suitably competent tradesperson who is qualified to work on unvented cylinders. The checks/work needed are listed in the maintenance part of these Instructions.

The control thermostat for indirect heat exchanger heat up of our cylinders are usually set at between 60°C - 65°C. During commissioning the actual temperature that the cylinder reaches when the thermostat(s) operate should be tested and adjusted so that it achieves a minimum of 60°C, in order to comply with the Legionella pasteurisation requirements.

When initially opening the taps, a small surge in flow may be experienced, which disappears as the pressure in the system stabilises. This is quite normal with these types of systems and does not indicate a fault.

In some areas the water will initially appear cloudy, but will quickly clear when left to stand. This is nothing to be concerned about and is due to aeration of the water.

WARNING - If water is seen flowing through the tundish, this indicates a fault condition which needs action.

If the discharge is hot and continuous, turn the boiler and/or the immersion heaters off, but do not turn off the cold water to the appliance until the discharge is cold. **Note:** The discharge may stop by itself as the discharge cools.

If the discharge is cold and intermittent, no immediate action is needed but this indicates a problem with the expansion vessel.

However, in both cases you must call the registered installer / a suitably qualified, competent tradesperson, advise them that you have an unvented cylinder and request a maintenance visit.

DO NOT, at any time, tamper in any way with the safety valves or overheat thermostats/ wiring.

SERVICING AND MAINTENANCE

The Registered Installer is responsible for the safe installation and operation of the system. The installer must also make his customer aware that periodic maintenance of the equipment is essential for safety.

Maintenance periods will vary for many reasons. Gledhill Building Products Ltd recommend a maximum of 12 months to coincide with boiler maintenance. Experience of local water conditions may indicate that more frequent maintenance is desirable, eg, when water is particularly hard, scale-forming or where the water supply contains a high proportion of solids, eg, sand. Maintenance must include the following:

1. Check and clean filter
2. Manually check the operation of the temperature relief valve.
3. Manually check the operation of the expansion relief valve.
4. Check discharge pipes from temperature and expansion relief valves are free from obstruction and blockage and are not passing any water.
5. Check the condition and if necessary descale the heat exchangers in hard water areas.
6. Check that water pressure downstream of pressure reducing valve is within the manufacturers limits.
7. Check operation of motorised valve.
8. Check the pressure on the air side of the expansion vessel. This must be done with the pressure on the water side at zero (gauge pressure).
9. Check and advise the householder not to place any clothing or other combustible materials against or on top of this appliance.
10. On completion of the work, fill in the Benchmark Service Record towards the back of this manual.

IMPORTANT NOTE

When draining down the appliance for any reason, the instructions provided in the Commissioning Section (Page 18) MUST be followed to prevent potential damage to the cylinder.

After servicing, complete the relevant Service Interval Record section of the Benchmark Checklist located on the inside back pages of this document.

Scale

In hard water areas it is recommended that an in-line scale inhibitor is fitted. Reducing the temperature of the stored water will reduce the rate at which scale forms. If the recovery rate is badly affected, this is an indication that scaling may have occurred. In this event, follow the procedures as recommended by a reputable Water Treatment Company.

General

No water at the tap. Check that the mains water supply is turned ON. Check the line strainer is not blocked. Check that the combination valve has been fitted so that water is flowing in the correct direction.
If the water at the tap is cold, ensure that the boiler has been switched ON and is working correctly. Check that there are no air locks in the primary system. ISOLATE THE UNIT AT THE MAINS ELECTRIC SUPPLY AND THEN CHECK THE FOLLOWING:

i. The cylinder thermostat
ii. The thermal cut-out, which can be re-set by pushing the red button
iii. The motorised valve
iv. The boiler thermostat
v. The boiler thermostat cut-out (if fitted)

ANY ENERGY CUT-OUT MUST NEVER BE BY-PASSED UNDER ANY CIRCUMSTANCES.

If the units are not getting hot and the heat source is electrical, ensure that the immersion heaters are isolated from the mains before re-setting the energy cut-out. If the immersion heater(s) need replacing this should be done with the units supplied from Gledhill Building Products Limited. Same day despatch to approved installers can be arranged by telephoning 01253 474402.

Discharge From Relief Valves

If cold water is discharging from the expansion relief valve into the tundish check the pressure on the expansion vessel when cold and recharge if necessary.

If the fault continues and the problem cannot be stopped by operating the easing control a few times then either the Pressure Reducing Valve or the Relief Valve may be at fault. If the cold water pressure is too high, this would suggest that the Pressure Reducing Valve is at fault and the Gledhill approved replacement should be fitted. If the pressure is correct then the Relief Valve will require replacing with a Gledhill approved component.

See Commissioning for drain down procedure.

If there is an overheat fault and very hot water is being discharged, turn off the heat source, **but not the water supply.**

When the supply is cool, check thermostats and energy cut-outs in the boiler and immersion heaters and replace the faulty component with one supplied by Gledhill and check that it works correctly before returning the system to full operation.

FAULT - No Hot Water (Direct)

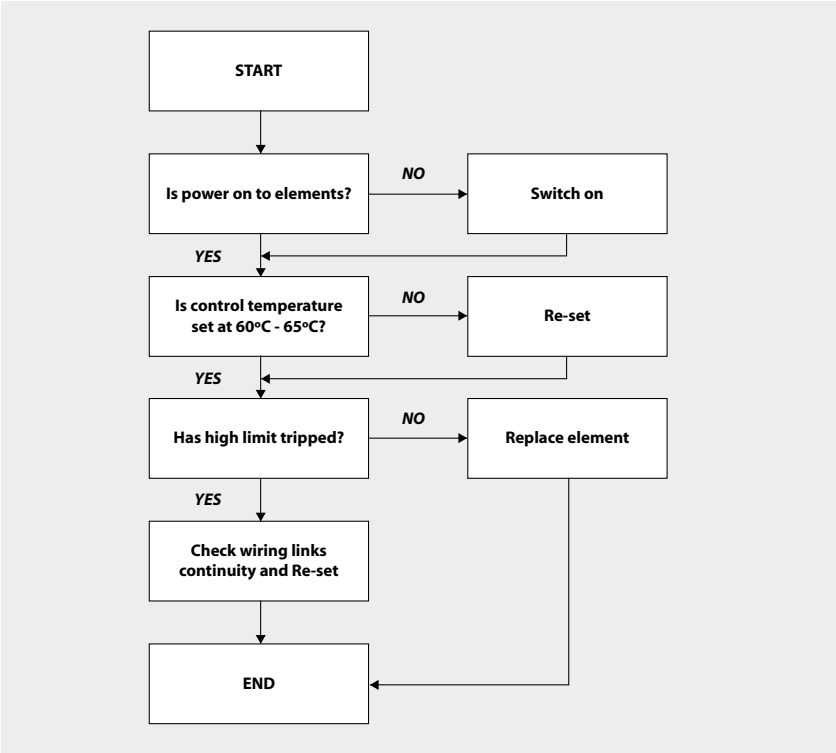

FAULT - No Hot Water (Indirect)

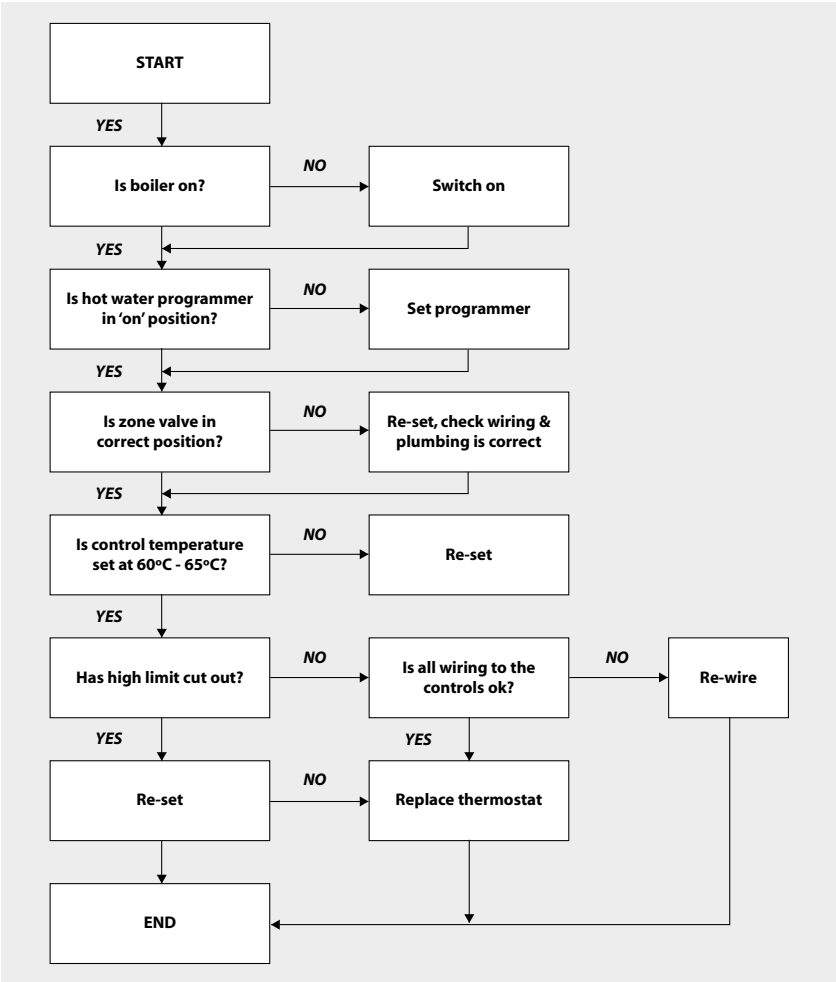

FAULT - Poor Water Flow at Hot Taps

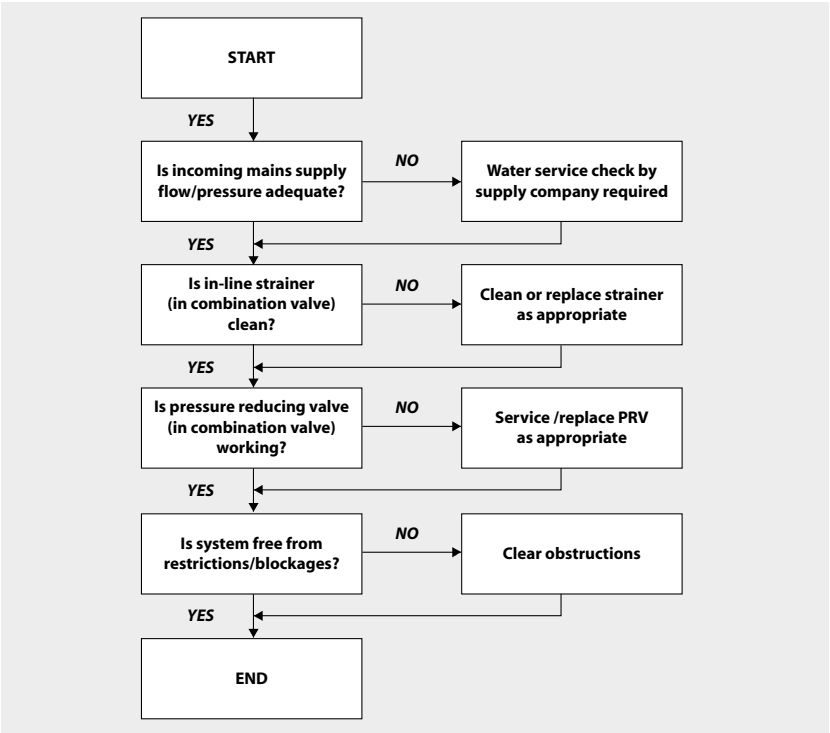

FAULT - Water Discharge Into Tundish

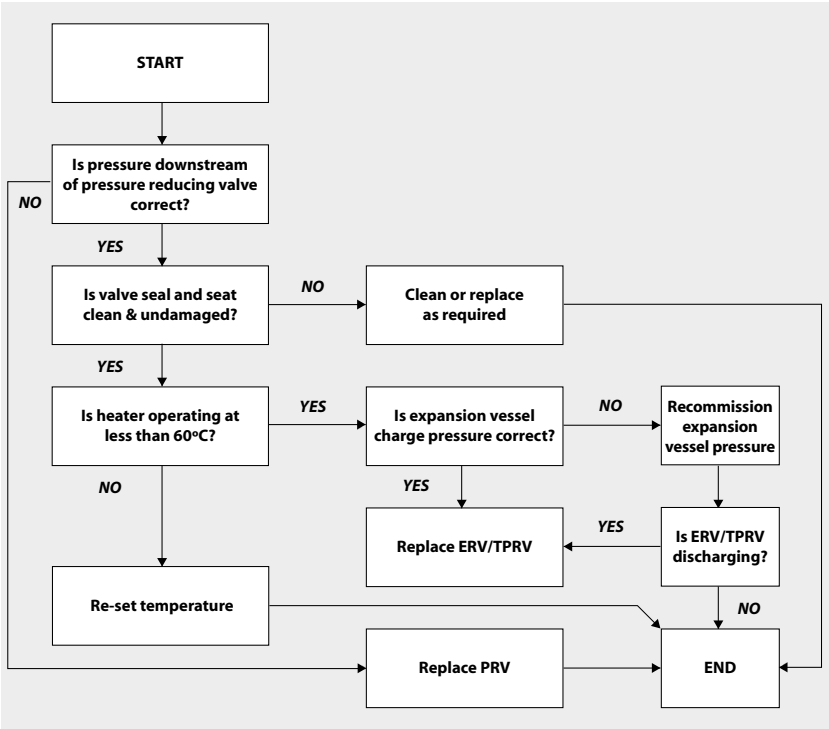

SERVICING AND MAINTENANCE

SPARE PARTS LIST			
	Description	**Quantity**	**Stock Code No.**
1	3kW immersion element	1	SH005
2	Drain cock	1	GS028
3	Lift up pressure and temperature relief valve 6 bar 89-96°C (Long probe)	1	SG025
4	Inlet group set at 3 bar c/w expansion relief valve set at 4.5 bar	1	SG022
5	¾" flexible hose	1	SG024
7	18 litre expansion vessel	1	XG215
8	24 litre expansion vessel	1	XG216
9	35 litre expansion vessel	1	XG217
10	22mm 2 port valve (indirects only)	1	XG083
11	Junction wiring box (12 way)	1	XG129
12	Control and overheat limit thermostat	1	XG212
13	15mm x 22mm tundish	1	XG207
14	Immersion heater thermostat	1	SH006

Water Savings

Water Related Costs Can Be Reduced By Good Plumbing Practice

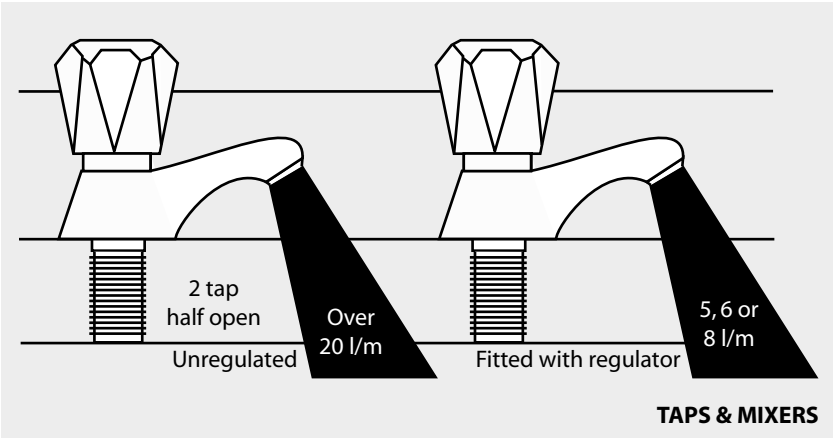

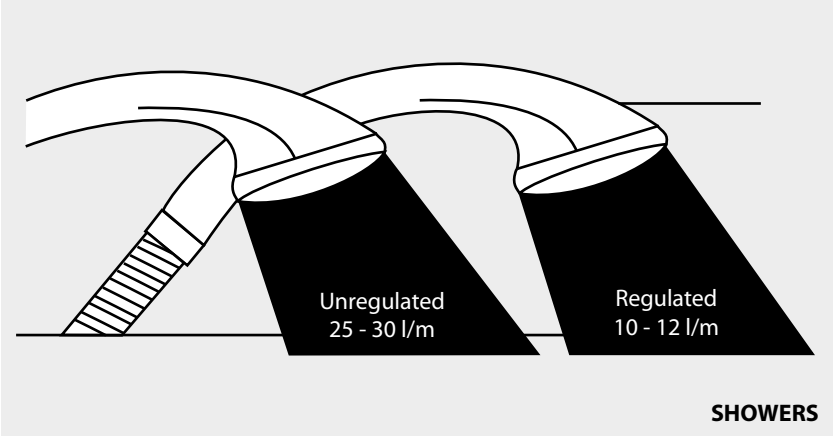

Vast quantities of water are needlessly run off to waste due to Taps, Mixers and Showers discharging flow rates far in excess of the rates required for them to perform their duties.

The contrasting flow rates shown on this leaflet clearly illustrate the savings that can be made whilst still providing a good performance.

British made Aquaflow Regulators provide constant flow rates by automatically compensating for supply pressure changes between 1 bar & 10 bars.

To facilitate installation into the wide range of plumbing equipment which is encountered in the U.K, Four Fixing Options are available:-

Options For Showers

1. MXF "DW" Range - For fitting behind Fixed Shower Heads or onto Flexible Hoses for Handshowers (preferably onto the inlet end when lightweight hoses are used).
2. Compression Fitting Range. "In Line" regulators as in Option 4 for Taps & Mixers.

Information by courtesy of

AQUAFLOW REGULATORS LTD

Haywood House, 40 New Road, Stourbridge, West Midlands DY8 1PA

TELEPHONE (01384) 442611 FAX: (01384) 442612

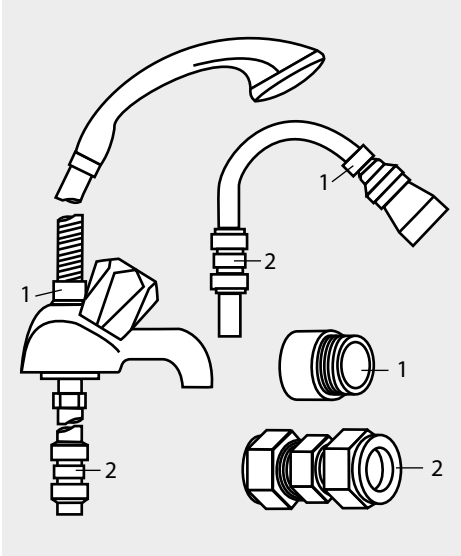

4 Fixing Options For Taps & Mixers

1. MK Range - Combined Regulators & Aerator for screwing onto Taps & Mixers with internal or external threads on their noses. Anti Vandal models also available.

2. MR05-T Range - Internal Regulators. Push-fit into Tap or Mixer seats. Produced in three sizes - 12.5mm (BS1010), 12mm & 10mm, Flangeless models also available for Taps with Low Lift washers.

3. MXF Standard Range - Screw on tail models for Taps & Mixers. Fix onto the tails before fitting the tap connectors. Available in 3/8", 1/2", 3/4" and 1" BSP.

4. Compression Fitting Range - "In Line" regulators housed in 15mm & 22mm CXC Couplers & Isolating Valves. "" UKWFBS listed by the Water Research Centre. Isolation valves available for slotted screwdriver operation or with coloured plastic handles. Now available also in plastic bodied push-fit couplers & valves.

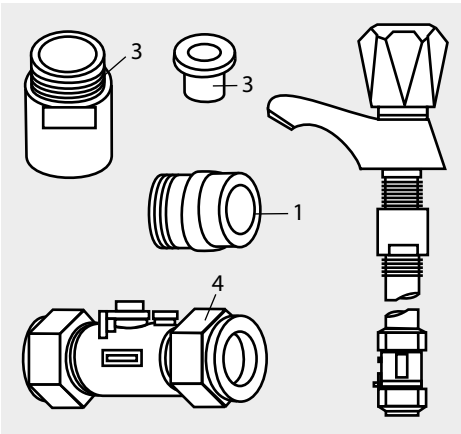

APPENDIX

MANUAL HANDLING OF APPLIANCE PRODUCTS

Description

Manual handling means any transporting or supporting of a load (including lifting, putting down, pushing, pulling, carrying or moving) by hand or bodily force.

Scope

This assessment will cover the largest unit within each product range.

For specific weights and dimensions please refer to technical data section.

Main Hazards

Vision may not be clear due to the size of the products.
Adopting an incorrect method of lifting may cause injury, attempting to lift these products will require help from others. (Team lifts)

Control Measures

Manual lifting procedure

The lift, key factors in safe lifting are:

a. **Balance**
b. **Position of back**
c. **Positioning of the arms and body**
d. **The hold**
e. **Taking the lead for team lifts**

a. **Balance -** Since balance depends essentially upon the position of the feet, they should be apart about hip breadth with one foot advanced giving full balance sideways and forward without tension. In taking up this position, lifting is done by bending at the knees instead of the hips and the muscles that are brought into use are those of the thigh and not the back.

b. **Position of back** - Straight - not necessary vertical. The spine must be kept rigid, this coupled with a bent knee position, allows the centre line of gravity of the body to be over the weight so reducing strain.

c. **Positioning of arms and body** - The further arms are away from the side, the greater the strain on the shoulders, chest and back. Keep elbows close to the body arms should be straight.

d. **The hold** - Before lifting ensure you have a good hold.

e. **Taking the lead for team lifts**- As more than one person is required for these products ensure that one person is taking the lead. **This may be you** so ensure that each person that is helping is made aware of the weight and of the items listed within this assessment. Make sure you and any others helping know the route you intend to take that it is clear of any obstructions. Never jerk the load as this will add a little extra force and can cause severe strain to the arms, back and shoulders. If there are steps involved decide on where you will stop and take a rest period. Move smoothly and in unison taking care to look and listen to others helping with the lift. Where possible use a sack truck to move the product over long flat distances, only lift the products when necessary. If in doubt stop and get more help.

Individual capability

Individual capability plays an important part in handling these products. Persons above average build and strength will find it easier and should be in good health. Persons below average build and strength may require more rest periods during the handling process.

Pregnant women should not carry out this operation.

Persons who are not in good health should seek medical advice prior to commencing any lifting or manual handling operation.

Residual risk

Following the guidelines given above will reduce any risk to injury.

All persons carrying out this operation must be fully trained and copies of the specific risk assessment made available for inspection and use in their training process.

Further guidance on Manual Handling can be obtained from the Health and Safety Executive. Manual Handling Operations Regulations 1992 (amended by Health and Safety (Miscellaneous Amendments) Regulations 2002.

WARRANTY INFORMATION

Gledhill Building Products guarantees the StainlessLite cylinder and components against material defect or manufacturing fault for a period of two years from the date of purchase. The two year warranty on the stainless steel inner cylinder will be extended to twenty five years in domestic properties on the registration of the cylinder (see documentation enclosed with the unit).

The above product guarantees are valid provided:

- It has been installed by a competent installer in accordance with the instructions detailed in our installation manual and all relevant Codes of Practice and Regulations in force at the time of installation.
- No factory fitted parts have been removed for unauthorised repair or replacement and the product has not been modified - other than by Gledhill.
- Any replacement parts used should be authorised, approved Gledhill spare parts.
- The cylinder has only been used for the storage of potable water supplied form the public mains (-max 200mg/litre chloride).
- It has not been subject to wrong or improper use, left uncared for, or subjected to scale or frost damage.
- The unit has been serviced annually by a competent, licenced engineer in accordance with the requirement set out in the manual.
- The Benchmark TM Commissioning Checklist Service Record included in our manual has been completed and updated after each annual service.
- Any disinfection has been carried out strictly in accordance with BS6700.
- For heavy use installation where constant usage / reheat is required titanium immersion heaters should be fitted.
- **The registration document enclosed with the unit is completed and returned within 60 days of purchase by the owner.** Evidence of purchase and date of supply must be submitted upon making a claim.

Guidance in the event of a problem
If you have a problem in the first year, please contact the plumber who fitted the unit. After the first year, you should contact the plumber who carries out the annual servicing for you.

Action in the event of component failure within warranty period
Failed components should be returned via the local authorised supplier. A nominal charge of £30 will be made which is refunded in full by Gledhill on receipt of the original part and proof of purchase.

Action in the event of inner vessel cylinder failure within warranty period
Since the full diagnosis of cause of failure is usually only possible with a laboratory test environment where a product can be fully assessed and tested, we will require the return of a cylinder which develops a leak for inspection. Providing our expert examination confirms a manufacturing fault or defect, credit will then be raised against the cost of the original cylinder.

Please note that a copy of the completed annual service record and commissioning checklist should be submitted with any claim.

As a HWA Charter Member we endeavour to provide consumers quality assurance, product satisfaction, and confidence in Gledhill, that we will deliver a service beyond just supplying the product.

Gledhill (Building Products) **Ltd**

AMD.DECEMBER 2013

CONDITIONS OF SALE & GUARANTEE TERMS

1. Gledhill (Building Products) Ltd ("We" or "Gledhills") only do business upon the Conditions which appear below and no other. Unless we so agree in writing these Conditions shall apply in full to any supply of goods by us to the exclusion of any Conditions or terms sought to be imposed by any purchaser. These Conditions of Sale and Warranty Terms override those which are contained on the Invoice Forms and all Sales are now subject to these Conditions of Sale and Warranty terms only.

2. PRICE

Once an order or call off has been accepted the price will be held for three months **but if delivery is extended beyond that period at the customer's request, then we reserve the right to amend the price when necessary.** The company reviews its pricing annually to adjust for changes in our cost base. We reserve the right to alter prices at any time for severe movements in raw materials (mainly copper and steel). If there is to be a change we will give customers at least four weeks notice but anything delivered after that date will be at the revised price. An order may not be cancelled or varied after acceptance without the written consent of the company. Such cancellation or variation shall be subject to such reasonable charges as may be appropriate.

3. SPECIFICATION

The goods are supplied in accordance with the Specifications (if any) submitted to the Purchaser and any additions and alterations shall be the subject of an extra charge. Any goods not so specified shall be in accordance with our printed literature or the literature of any of our component suppliers (subject to any modifications made since publication). If we adopt any changes in construction or design of the goods, or in the specification printed in our literature, the Purchaser shall accept the goods so changed in fulfilment of the order.

4. PAYMENT

The buyer shall make payment in full within thirty days from the end of the month in which the invoice is dated. If we receive payment in full on or before the due date we will allow an appropriate settlement discount except where we have quoted a special net price. If payment is not received in full on or before the due date we shall be entitled in addition to the invoice price to:

(i) payment of a sum equal to any increase in the copper price supplement applicable to the particular goods sold between the date of receipt of order and the date of receipt of payment in full; and

(ii) interest on any part of the invoice price unpaid after the due date at the rate of 3% per annum over the base rate for the time being of HSBC Bank plc.

5. TIME

We give estimates of delivery dates in good faith and time of delivery is not nor shall be made of the essence of any contract nor shall we be liable for any loss or damage occasioned by delay in delivery.

6. DELIVERY

We deliver free normally by our own vehicles within 25 miles of any of our manufacturing depots. Delivery to any place more than 25 miles from one of our manufacturing depots may be subject to our quoted delivery charges. We reserve the right to make delivery of goods contained in one order by more than one consignment and at different times. Where a period is agreed for delivery and such period is not extended by our Agreement, the Purchaser shall take delivery within that period. If the Purchaser fails to take delivery, we shall be entitled at the Purchaser's risk and expense to store the goods at the Purchaser's premises or elsewhere and to demand payment as if they had been despatched. Off loading at point of delivery shall be the responsibility of and be undertaken by the Purchaser.

7. SHORTAGES OR DAMAGE

Goods must be inspected before signature of delivery note and any damage, shortage or discrepancy noted on the delivery note and the goods returned on the same vehicle. The buyer must also give us immediate written notice of the damage, shortage or discrepancy so that we may prompt investigation.

8. RETURN OF GOODS

Goods may not be returned to the Company except by prior written permission of an authorised officer of the Company and such return shall be subject to payment by the Purchaser of handling and re-stocking charges, transport and all other costs incurred by the Company.

9. COMPANY LIABILITY AND GUARANTEE

9.1. Subject to the terms of these Conditions of Sale and Guarantee Terms Gledhills provide Guarantees in respect of specific products as set out in this clause.

9.2. Each Guarantee is strictly conditional upon the following:-

9.2.1. Complaints must be given to us immediately, before any action is taken, as responsibility cannot be accepted if repairs or renewals are attempted on site without our written approval.

9.2.2. The unit has been installed in accordance with our installation and service instructions and all relevant codes of practice and regulations in force at the time of installation.

9.2.3. All necessary inlet controls and safety valves have been fitted correctly.

9.2.4. The unit has only been used for the storage of potable water supplied from the public mains. The water quality shall be in accordance with European Council Directive 98/83 EC, or revised version at the date of installation, and is not fed with water from a private supply. Particular:

Chloride content:	Max. 200 mg/l
Sulphate content:	Max. 200 mg/l
Combination chloride/sulphate:	Max. 300 mg/l (in total)

9.2.5 Where appropriate the unit has been regularly maintained as detailed in the installation and service instructions

9.2.6. Defects caused by corrosion or scale deposits are not covered by any Guarantee.

9.2.7. Where we agree to rectify any defect we reserve the right to undertake the work on our own premises.

9.2.8. We will not accept any labour charges associated with replacing the unit or parts for any of the following products listed.

9.2.9. If the newly fitted water heater is not in regular use then it must be flushed through with fresh water for at least 15 minutes. Open at least one hot water tap once per week, during a period of at least 4 weeks.

9.3. Guarantees are provided in respect of specified goods supplied by Gledhills as follows:-

(a) Domestic and Commercial Open Vented Cylinders and Tanks.

The storage vessel is guaranteed for ten years and if it proves to be defective either in materials or workmanship, we will either repair or supply replacement at our option with the closest substitute in the case of any obsolete product to any address in Great Britain.

(i) free of all charge during the first year after delivery by us.

(ii) thereafter at a charge of one-tenth of the then current list price and any copper price supplement and delivery charge during the second year after delivery by us and increasing by a further one-tenth on the second and subsequent anniversary of delivery by us.

(b) Domestic Mains Fed Products [Primary Stores]

The storage vessel is guaranteed for five years and if it or any integral pipework as part of the storage vessel assembly proves to be defective either in materials or workmanship, we reserve the right to either repair or supply replacements or the closest possible substitute in the case of any obsolete product and will collect and deliver to any address in England, Wales and Scotland (excluding all Scottish Islands).

(i) free of all charge during the first year after delivery by us.

(ii) thereafter at a charge of one-fifth of the then current list price or any copper price supplement and delivery charge during the second year after delivery by us increasing by a further one-fifth on the second and subsequent anniversary of delivery by us.

(c) StainlessLite Unvented Cylinders

Gledhill guarantee the components including controls, valves and electrical parts for two years from the date of purchase. IT SHOULD BE NOTED THAT THE FACTORY FITTED TEMPERATURE AND PRESSURE RELIEF VALVE MUST NOT BE REMOVED OR ALTERED IN ANY WAY OR THE GUARANTEE WILL NOT BE VALID. GLEDHILL WILL NOT BE RESPONSIBLE FOR ANY CONSEQUENTIAL LOSS OR DAMAGE HOWEVER IT IS CAUSED.

The guarantee for the stainless steel vessel is for twenty five years against material defect or manufacturing faults if the original unit is returned to us AND PROVIDED THAT:

(i) It has not been modified, other than by Gledhill.

(ii) It has not been subjected to wrong or improper use or left uncared for.

(iii) It has only been used for the storage of potable water supplied from the public mains, max 200mg/litre chloride.

(iv) It has not been subjected to frost damage.

(v) The benchmark service record is completed after each annual service.

(vi) The unit has been serviced annually.

(vii) Any disinfection has been carried out strictly in accordance with BS6700.

If the stainless steel vessel proves to be defective either in materials or workmanship we reserve the right to either repair or supply replacements or the closest possible substitute in the case of any obsolete product and will collect and deliver to any address in England, Scotland and Wales (excluding all islands):

(i) free of charge during the first year after delivery by us.

(ii) thereafter at a charge of one twenty fifth of the then current list price during the second year after delivery by us and increasing by a further one twenty fifth on the second and subsequent anniversary of delivery by us.

ACTION IN THE EVENT OF FAILURE

We will require the return of a cylinder which develops a leak for inspection. If our examination confirms a failure then an appropriate level of credit against the cost of the original cylinder will be issued in line with the terms of our warranty.

Please note:

- Installation must have been carried out by a licensed specialized company (heating contractor or plumber) following the version of installation instructions in force.
- Gledhill or its representative was given the opportunity to check complaints on site immediately after any defect occurred.
- Confirmation exists that the system was commissioned properly and that the system was checked and maintenance was performed annually by a specialised company licensed for this purpose.

(d) Components of our products other than Storage Vessels and Integral Pipework.

We will either extend to the purchaser the same terms of warranty as we are given by the manufacturer of the component or if the manufacturer does not give any warranty, replace free of charge any component which becomes defective within two years after the date of the delivery by us and is returned to us at the purchaser's expense but we shall not meet the cost of removal or shipping or return of the component or any other cost charges or damages incurred by the purchaser.

9.4.

9.4.1. In respect of goods supplied by us and in respect of any installation work carried out by or on our behalf, our entire liability and the purchaser's sole remedies (subject to the Guarantees) shall be as follows:-

(a) We accept liability for death or personal injury to the extent that it results from our negligence or that of our employees

(b) Subject to the other provisions of this clause 9 we accept liability for direct physical damage to tangible property to the extent that such damage is caused by our negligence or that of our employees, agents or subcontractors.

(c) Our total liability to the purchaser over and above any liability to replace under the Guarantees (whether in contract or in tort including negligence) in respect of any one cause of loss or damage claimed to result from any breach of our obligations hereunder, shall be limited to actual money damages which shall not exceed £20,000 provided that such monetary limit shall not apply to any liability on the part of ourselves referred to in paragraph (a) above

(d) Except as provided in paragraph (a) above but otherwise not withstanding any provision herein contained in no event shall we be liable for the following loss or damage howsoever caused and even if foreseeable by us or in our contemplation:-

(i) economic loss which shall include loss of profits, business revenue, goodwill or anticipated savings

(ii) damages in respect of special indirect or consequential loss or damage (other than death, personal injury and damage to tangible property)

(iii) any claim made against the purchaser by any other party (save as expressly provided in paragraph (b) above)

(e) Except in respect of our liability referred to in paragraph (a) above no claim may be made or action brought (whether in contract or in tort including negligence) by the purchaser in respect of any goods supplied by us more than one year after the date of the invoice for the relevant goods.

(f) Without prejudice to any other term we shall not be liable for any water damage caused directly or indirectly as a result of any leak or other defect in the goods. We cannot control the conditions of use of the goods or the time or manner or location in which they will be installed and the purchaser agrees to be fully responsible for testing and checking all works which include the goods at all relevant times (up to, including and after commissioning) and for taking all necessary steps to identify any leaks and prevent any damage being caused thereby.

(g) Nothing in these Conditions shall confer on the purchaser any rights or remedies to which the purchaser would not otherwise be legally entitled

10. LOSS OR INJURY

Notwithstanding any other provision contained herein the purchaser's hereby agree to fully indemnify us against any damages losses costs claims or expenses incurred by us in respect of any claim brought against us by any third party for:-

(a) any loss injury or damage wholly or partly caused by any goods supplied by us or their use.

(b) any loss injury or damage wholly or partly caused by the defective installation or substandard workmanship or materials used in the installation of any goods supplied by us.

(c) any loss injury or damage in any way connected with the performance of this contract.

(d) any loss resulting from any failure by the purchaser to comply with its obligations under these terms as to install and/or check works correctly.

PROVIDED that this paragraph will not require the purchaser to indemnify us against any liability for our own acts of negligence or those of our employees agents or sub-contractors

FURTHER in the case of goods supplied by us which are re-sold and installed by a third party by the purchaser it will be the sole responsibility of the purchaser to test the goods immediately after their installation to ensure that inter alia they are correctly installed and in proper working order free from leaks and are not likely to cause any loss injury or damage to any person or property.

11. VARIATION OF WARRANTY AND EXCLUSION

Should our warranty and exclusion be unacceptable we are prepared to negotiate for variation in their terms but only on the basis of an increase in the price to allow for any additional liability or risk which may result from the variation. Purchasers are advised to insure against any risk or liability which they may incur and which is not covered by our warranty.

12. ADVICE

Any advice or assistance given by the Company is provided without charge and is in good faith without undertaking, representation or warranty, and we will not accept any liability, whether consequential or compensatory, for advice or assistance given.

13. RISK AND RETENTION OF TITLE

(a) goods supplied by us shall be at the Purchaser's risk immediately upon delivery to the Purchaser or into custody on the Purchaser's behalf or to the Purchaser's Order. The Purchaser shall effect adequate insurance of the goods against all risks to the full invoice value of the goods, such insurance to be effective from the time of delivery until property in the goods shall pass to the Purchaser as hereinafter provided.

(b) property in the goods supplied hereunder will pass to the Purchaser when full payment has been made by the Purchaser to us for :-

(i) the goods of the subject of this contract.

(ii) all other goods the subject to of any other contract between the Purchaser and us which, at the time of payment of the full price of the goods sold under this contract, have been delivered to the Purchaser but not paid for in full.

(c) until property in the goods supplied hereunder passes to the Purchaser in accordance with paragraph (2) above.

(i) the Purchaser shall hold the goods in a fiduciary capacity for us and shall store the same separately from any other goods in the Purchaser's possession and in a manner which enables them to be identified as our goods.

(ii) the Purchaser shall immediately return the goods to us should our authorised representative so request. All the necessary incidents associated with a fiduciary relationship shall apply.

(d) the Purchaser's right to possess the goods shall cease forthwith upon the happening of any of the following events, namely :-

(i) if the Purchaser fails to make payment in full for the goods within the time stipulated in clause 4 hereof.

(ii) if the Purchaser, not being a company, commits any act of bankruptcy, makes a proposal to his or her creditors for a compromise or does anything which would entitle a petition for a Bankruptcy Order to be presented.

(iii) if the Purchaser, being a company, does anything or fails to do anything which would entitle an administrator or an administrative receiver or a receiver to take possession of any assets or which would entitle any person to present a petition for winding up or to apply for an administration order.

(e) the Purchaser hereby grants to us an irrevocable licence to enter at any time any vehicle or premises owned or occupied by the Purchaser or in the possession of the Purchaser for the purposes of repossessing and recovering any such goods the property in which has remained in us under paragraph (2) above. We shall not be responsible for and the Purchaser will indemnify us against liability in respect of damage caused to any vehicle or premises in such repossession and removal being damaged which it was not reasonably practicable to avoid.

(f) notwithstanding paragraph (3) hereof and subject to paragraph (7) hereof, the Purchaser shall be permitted to sell the goods to third parties in the normal course of business. In this respect the Purchaser shall act in the capacity of our commission agent and the proceeds of such sale :-

(i) shall be held in trust for us in a manner which enables such proceeds to be identified as such, and:

(ii) shall not be mixed with other monies nor paid into an overdrawn bank account.

We, as principal, shall remunerate the Purchaser as commission agent a commission depending upon the surplus which the Purchaser can obtain over and above the sum, stipulated in this contract of supply which will satisfy us.

(g) in the event that the Purchaser shall sell any of the goods pursuant to clause (6) hereof, the Purchaser shall forthwith inform us in writing of such sale and of the identity and address of the third party to whom the goods have been sold.

(h) if, before property in the goods passes to the Purchaser under paragraph (2) above the goods are or become affixed to any land or building owned by the Purchaser it is hereby agreed and declared that such affixation shall not have the effect of passing property in the goods to the Purchaser. Furthermore if, before property in the goods shall pass to the Purchaser under paragraph (2) hereof, the goods are or become affixed to any land or building (whether or not owned by the Purchaser), the Purchaser shall:-

(i) ensure that the goods are capable of being removed without material injury to such land or building.

(ii) take all necessary steps to prevent title to the goods from passing to the landlord of such land or building.

(iii) forthwith inform us in writing of such affixation and of the address of the land or building concerned.

The Purchaser warrants to repair and make good any damage caused by the affixation of the goods to or their removal from any land or building and to indemnify us against all loss damage or liability we may incur or sustain as a result of affixation or removal.

(i) in the event that, before property in the goods has passed to the Purchaser under paragraph (2) hereof, the goods or any of them are lost, stolen, damaged or destroyed :-

(ii) the Purchaser shall forthwith inform us in writing of the fact and circumstances of such loss, theft, damage or destruction.

(iii) the Purchaser shall assign to us the benefit of any insurance claim in respect of the goods so lost, stolen, damaged or destroyed.

14. NON-PAYMENT

If the Purchaser shall fail to make full payment for the goods supplied hereunder within the time stipulated in clause 4 hereof or be in default of payment for any other reason then, without prejudice to any of our other rights hereunder, we shall be entitled to stop all deliveries of goods and materials to the Purchaser, including deliveries or further deliveries of goods under this contract. In addition we shall be entitled to terminate all outstanding orders.

15. VALUE ADDED TAX

All prices quoted are exclusive of Value Added Tax which will be charged at the rate ruling at the date of despatch of invoice.

16. TRADE SALES ONLY

We are only prepared to deal with those who are not consumers within the terms of the Unfair Contract Terms Act 1977, the Sale of Goods Act 1979 and the Supply of Goods and Services Act 1982. Accordingly any person who purchases from us shall be deemed to have represented that he is not a consumer by so purchasing.

17. JURISDICTION

The agreement is subject to English law for products delivered in England and Scottish law for products delivered in Scotland and any dispute hereunder shall be settled in accordance therewith dependent upon the location.

18. PRODUCT DEVELOPMENT

Gledhill have a policy of continuous product development and may introduce product modifications from time to time.

MAINS PRESSURE HOT WATER STORAGE SYSTEM COMMISSIONING CHECKLIST

This Commissioning Checklist is to be completed in full by the competent person who commissioned the storage system as a means of demonstrating compliance with the appropriate Building Regulations and then handed to the customer to keep for future reference.

Failure to install and commission this equipment to the manufacturer's instructions may invalidate the warranty but does not affect statutory rights.

Customer name:	Telephone number:
Address:	
Cylinder Make and Model	
Cylinder Serial Number	
Commissioned by (PRINT NAME):	Registered Operative ID Number
Company name:	Telephone number:
Company address:	
	Commissioning date:
To be completed by the customer on receipt of a Building Regulations Compliance Certificate*:	
Building Regulations Notification Number (if applicable)	

ALL SYSTEMS PRIMARY SETTINGS (indirect heating only)				
Is the primary circuit a sealed or open vented system?	Sealed		Open	
What is the maximum primary flow temperature?				°C

ALL SYSTEMS				
What is the incoming static cold water pressure at the inlet to the system?			bar	
Has a strainer been cleaned of installation debris (if fitted)?		Yes	No	
Is the installation in a hard water area (above 200ppm)?		Yes	No	
If yes, has a water scale reducer been fitted?		Yes	No	
What type of scale reducer has been fitted?				
What is the hot water thermostat set temperature?			°C	
What is the maximum hot water flow rate at set thermostat temperature (measured at high flow outlet)?			l/min	
Time and temperature controls have been fitted in compliance with Part L of the Building Regulations?			Yes	
Type of control system (if applicable)	Y Plan	S Plan	Other	
Is the cylinder solar (or other renewable) compatible?		Yes	No	
What is the hot water temperature at the nearest outlet?			°C	
All appropriate pipes have been insulated up to 1 metre or the point where they become concealed			Yes	

UNVENTED SYSTEMS ONLY				
Where is the pressure reducing valve situated (if fitted)?				
What is the pressure reducing valve setting?			bar	
Has a combined temperature and pressure relief valve and expansion valve been fitted and discharge tested?		Yes	No	
The tundish and discharge pipework have been connected and terminated to Part G of the Building Regulations			Yes	
Are all energy sources fitted with a cut out device?		Yes	No	
Has the expansion vessel or internal air space been checked?		Yes	No	

THERMAL STORES ONLY		
What store temperature is achievable?		°C
What is the maximum hot water temperature?		°C

ALL INSTALLATIONS		
The hot water system complies with the appropriate Building Regulations	Yes	
The system has been installed and commissioned in accordance with the manufacturer's instructions	Yes	
The system controls have been demonstrated to and understood by the customer	Yes	
The manufacturer's literature, including Benchmark Checklist and Service Record, has been explained and left with the customer	Yes	

Commissioning Engineer's Signature
Customer's Signature
(To confirm satisfactory demonstration and receipt of manufacturer's literature)

*All installations in England and Wales must be notified to Local Authority Building Control (LABC) either directly or through a Competent Persons Scheme. A Building Regulations Compliance Certificate will then be issued to the customer.

benchmark COLLECTIVE MARK
THE MARK OF QUALITY FOR THE INSTALLATION, COMMISSIONING AND SERVICING OF DOMESTIC HEATING AND HOT WATER SYSTEMS

© Heating and Hotwater Industry Council (HHIC)

www.centralheating.co.uk

While this Checklist can be used for any installation covered by its description, only appliances manufactured by Scheme Members will be covered by the rules and requirements of the Benchmark Scheme.

SERVICE RECORD

It is recommended that your hot water system is serviced regularly and that the appropriate Service Record is completed.

Service Provider

Before completing the appropriate Service Record below, please ensure you have carried out the service as described in the manufacturer's instructions.

SERVICE 01	Date:
Engineer name:	
Company name:	
Telephone No:	
Comments:	
Signature	

SERVICE 02	Date:
Engineer name:	
Company name:	
Telephone No:	
Comments:	
Signature	

SERVICE 03	Date:
Engineer name:	
Company name:	
Telephone No:	
Comments:	
Signature	

SERVICE 04	Date:
Engineer name:	
Company name:	
Telephone No:	
Comments:	
Signature	

SERVICE 05	Date:
Engineer name:	
Company name:	
Telephone No:	
Comments:	
Signature	

SERVICE 06	Date:
Engineer name:	
Company name:	
Telephone No:	
Comments:	
Signature	

SERVICE 07	Date:
Engineer name:	
Company name:	
Telephone No:	
Comments:	
Signature	

SERVICE 08	Date:
Engineer name:	
Company name:	
Telephone No:	
Comments:	
Signature	

SERVICE 09	Date:
Engineer name:	
Company name:	
Telephone No:	
Comments:	
Signature	

SERVICE 10	Date:
Engineer name:	
Company name:	
Telephone No:	
Comments:	
Signature	

FOR TECHNICAL SUPPORT:
01253 474584

FOR ANNUAL SERVICE AND MAINTENANCE:
0800 3800 129

FOR SPARE PARTS:
01253 474412

OR
WWW.GLEDHILL-SPARES.NET

GLEDHILL

Gledhill Building Products Limited
Sycamore Estate,
Squires Gate,
Blackpool FY4 3RL

T: 01253 474550
enquiries@gledhill.net

WWW.GLEDHILL.NET

NSF-WRc

FM 02057

PART OF GROUPE ATLANTIC UK & ROI DIVISION

Due to a programme of continuous improvement Gledhill Building Products reserve the right to modify products without prior notice. It is advisable to check the product technical detail by using the latest design and installation manuals available from our technical support team or on our website.It is an offence to copy or adapt this document without consent of the owner.